# CHARM PATTERNS by Gertie

## CAMILLE SHEATH

Sizes 2-20

with cup sizes A-H

5/8 inch (in) (1.5 cm) seam allowances are included on all pattern pieces.

**SIZE 2-20 PATTERN SIZE KEY**

2
4
6
8
10
12
14
16
18
20

**SYMBOL KEY**

grainline arrow

match point/ placement mark

© 2024 Charm Patterns by Gertie. Distribution and Commercial Use Prohibited.

PAGE 1

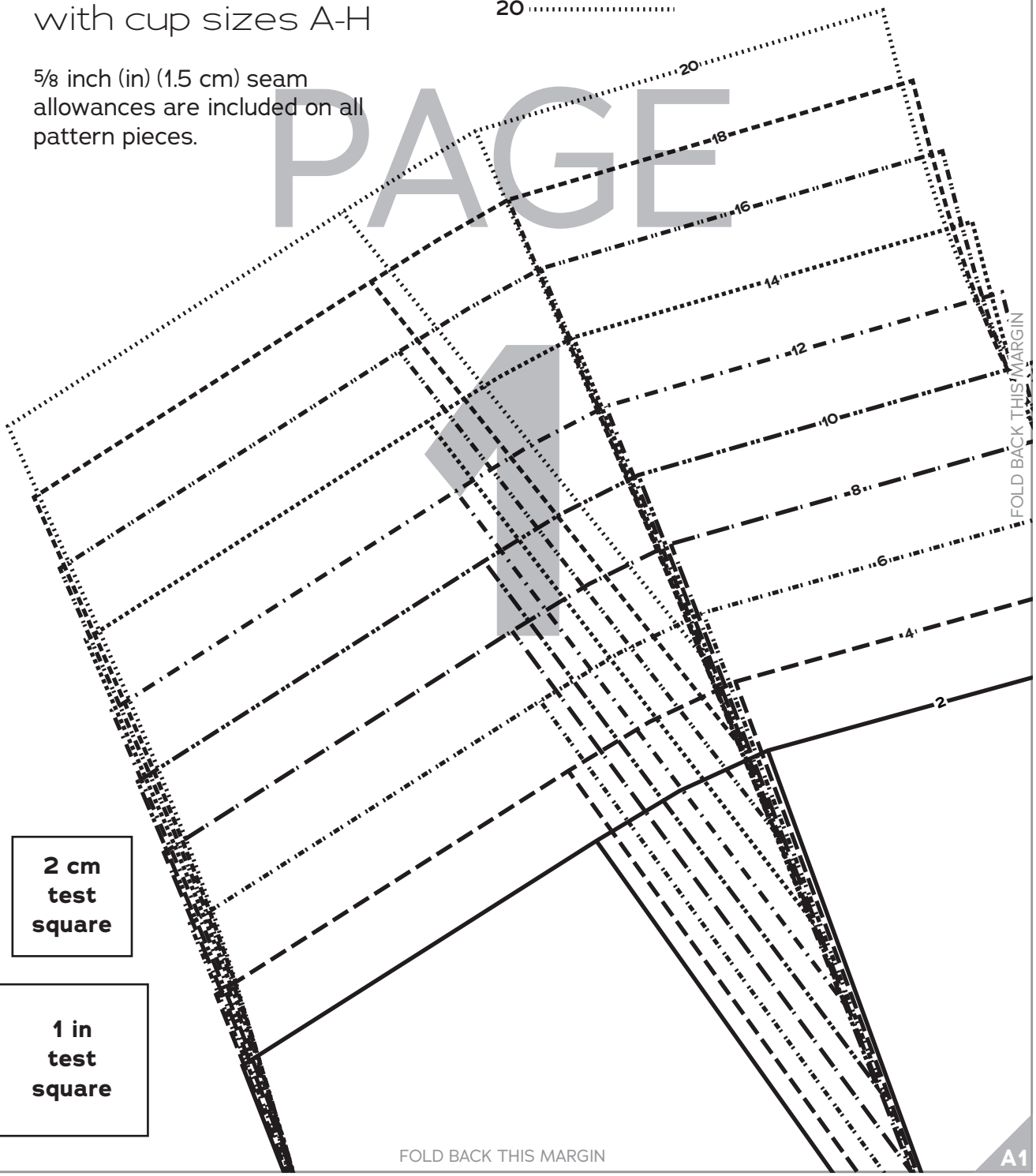


2 cm test square

1 in test square

FOLD BACK THIS MARGIN

A1

# PAGE 2

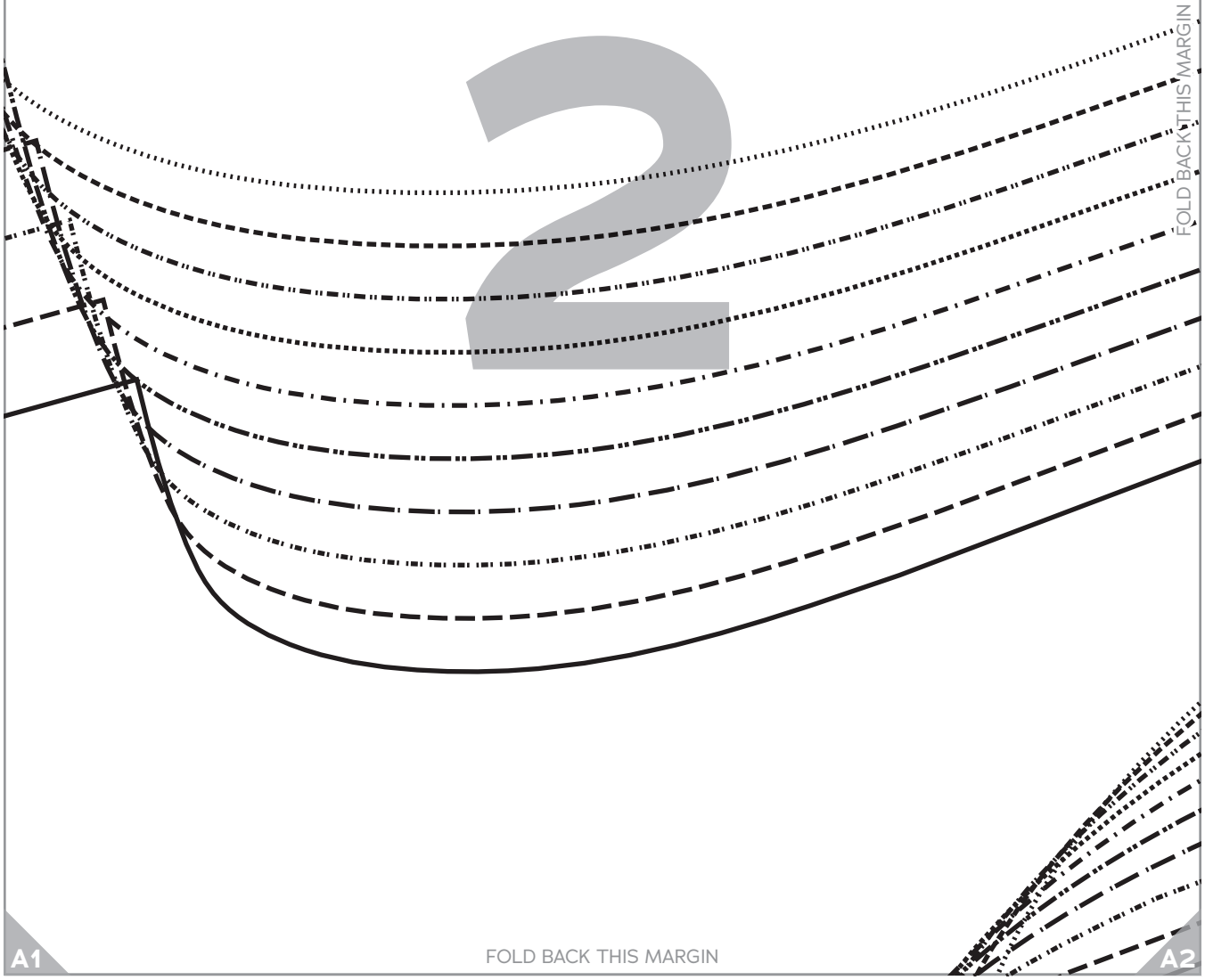

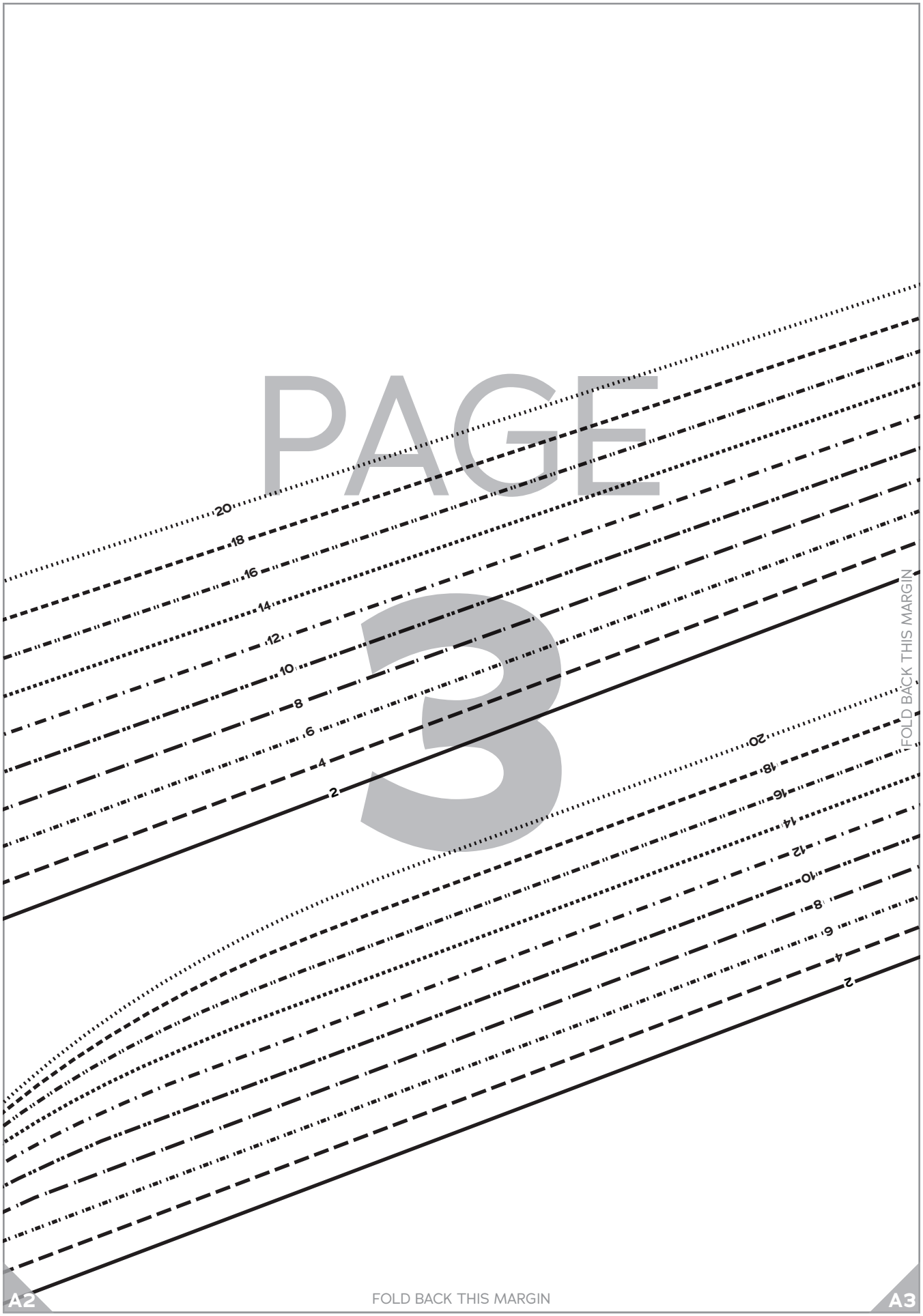
PAGE
3
20
18
16
14
12
10
8
6
4
2
FOLD BACK THIS MARGIN
A2
FOLD BACK THIS MARGIN
A3

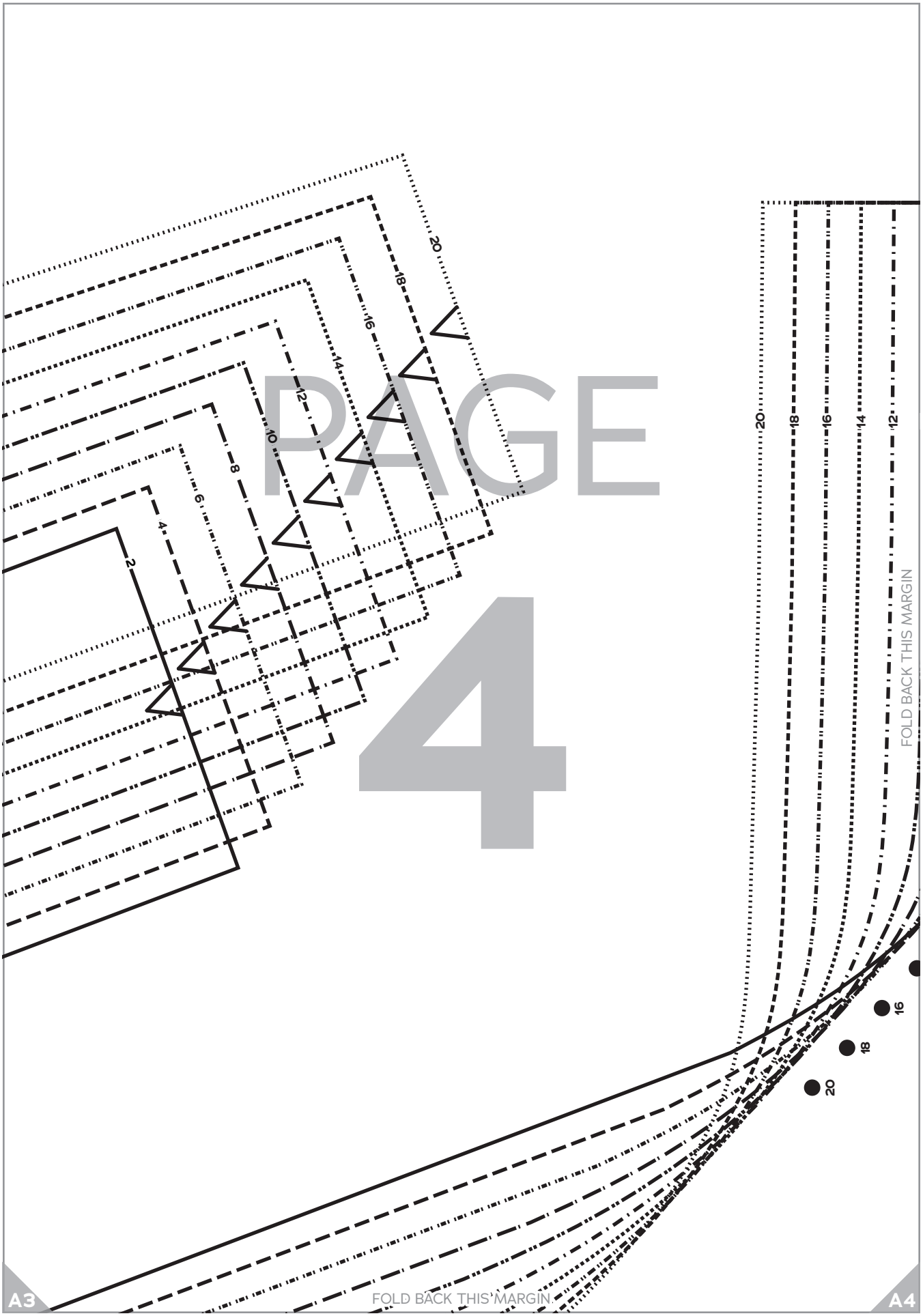
PAGE
4
2
4
6
8
10
12
14
16
18
20
12
14
16
18
20
16
18
20
FOLD BACK THIS MARGIN
FOLD BACK THIS MARGIN
A3
A4

FOLD
PAGE
5
CHARM PATTERNS by Gertie
CAMILLE SHEATH
sizes 2-20
Bodice Front,
A Cup
Cut 1 fabric on fold,
1 lining on fold
FOLD BACK THIS MARGIN
A4
FOLD BACK THIS MARGIN
A5

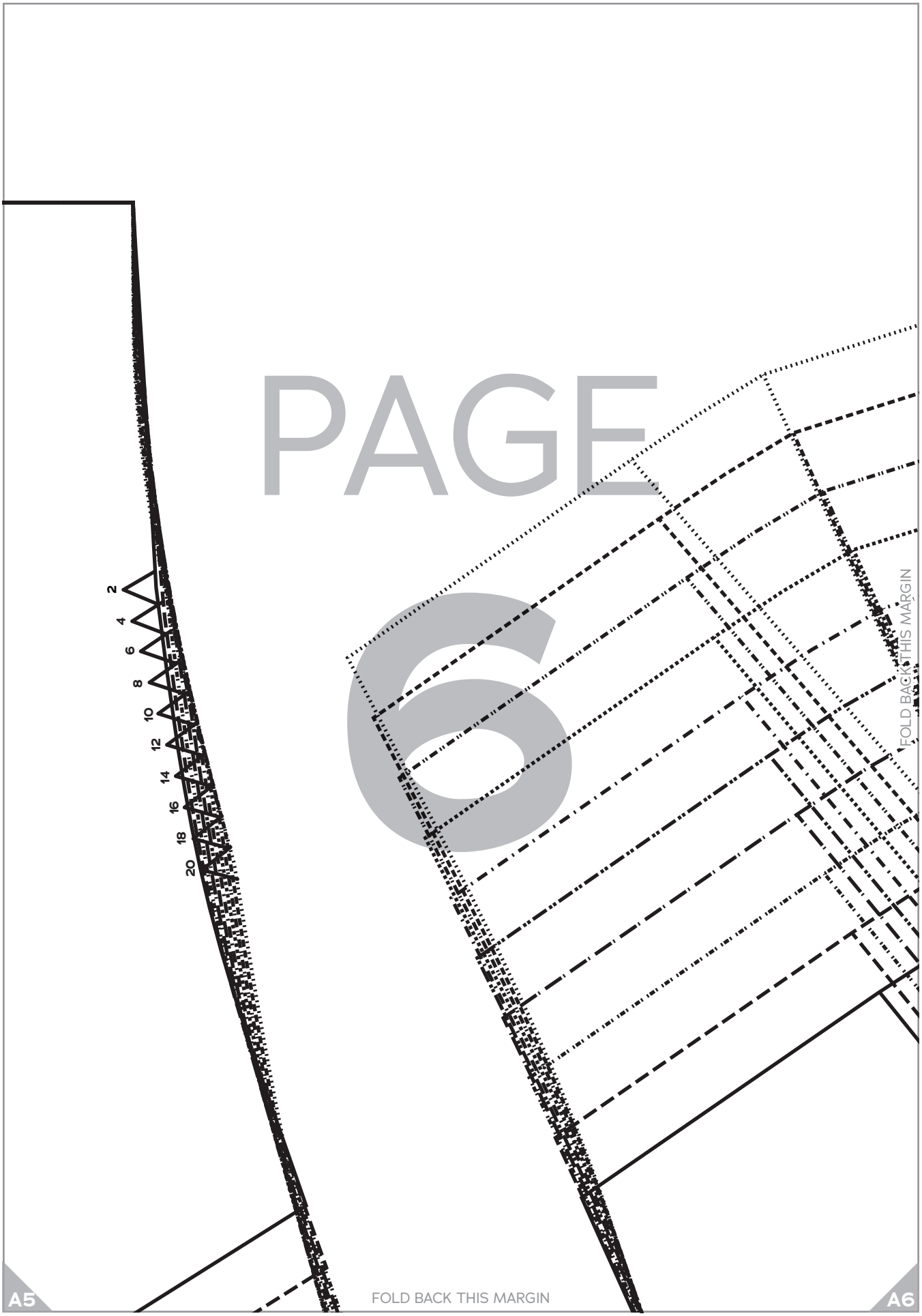
PAGE
6
2
4
6
8
10
12
14
16
18
20
FOLD BACK THIS MARGIN
FOLD BACK THIS MARGIN
A5
A6

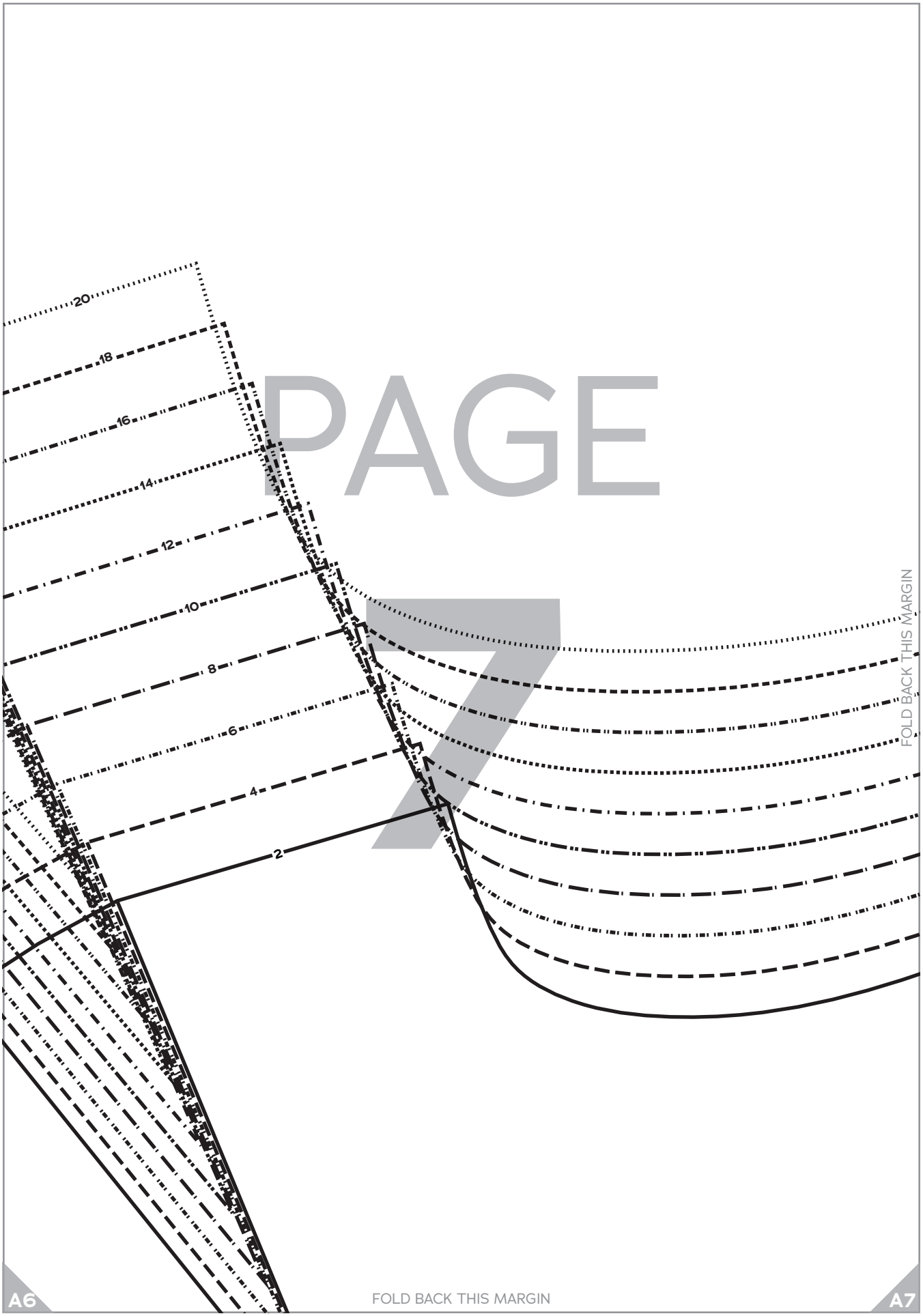
PAGE
7
20
18
16
14
12
10
8
6
4
2
FOLD BACK THIS MARGIN
A6
FOLD BACK THIS MARGIN
A7

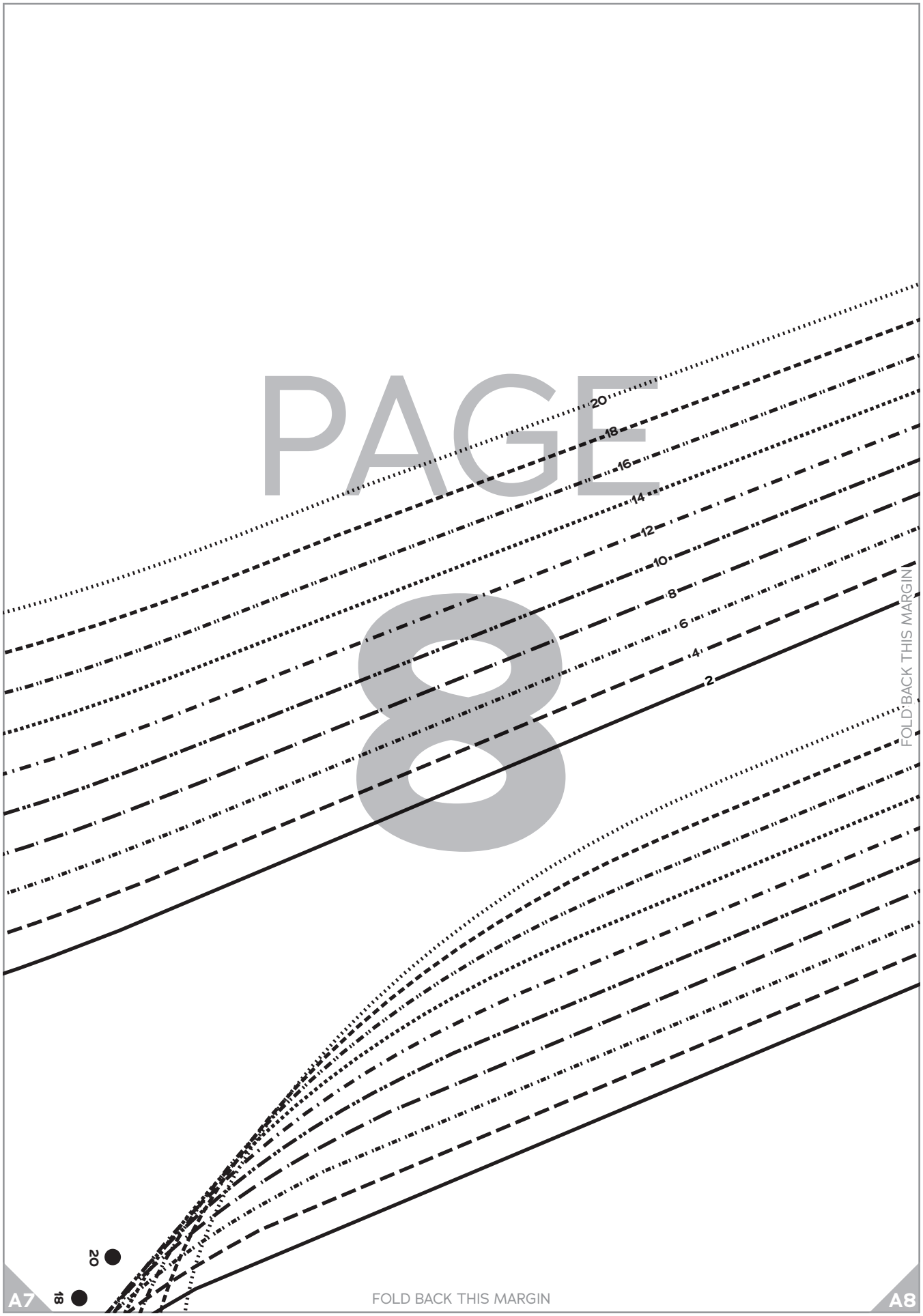
PAGE
8
20
18
16
14
12
10
8
6
4
2
FOLD BACK THIS MARGIN
20
18
A7
FOLD BACK THIS MARGIN
A8

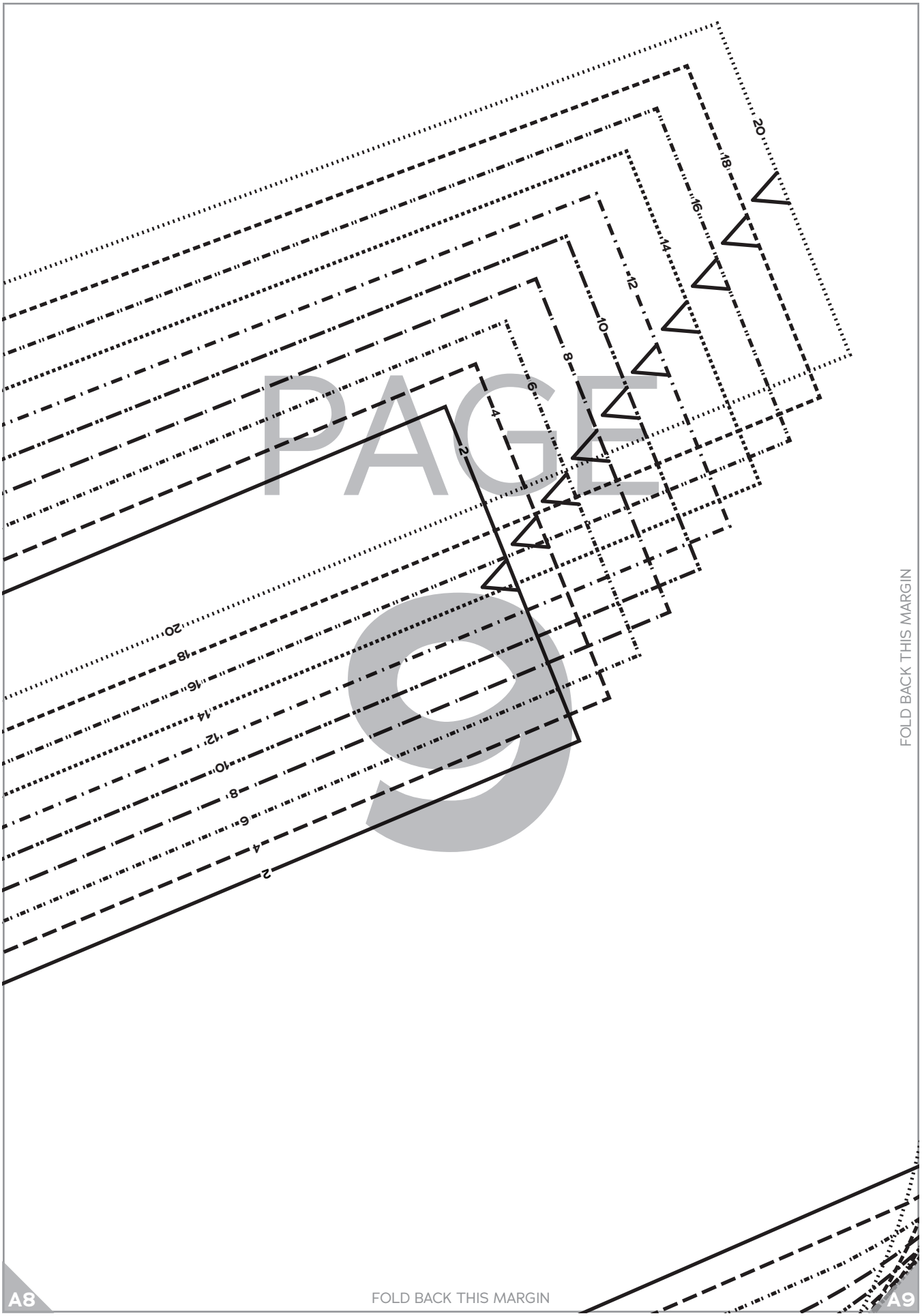
PAGE
9
2
4
6
8
10
12
14
16
18
20
FOLD BACK THIS MARGIN
A8
A9

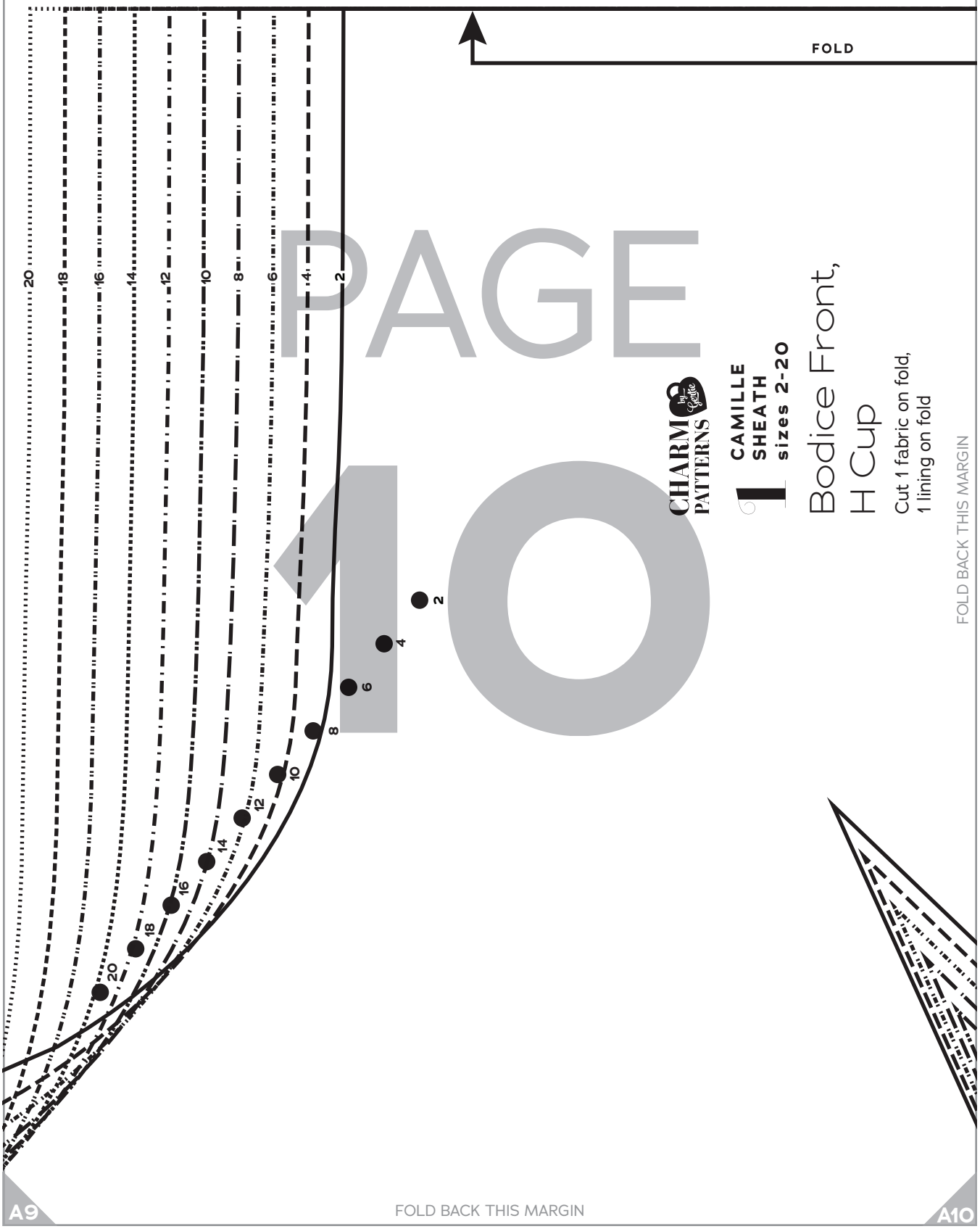
FOLD
PAGE 10
CHARM PATTERNS by Gertie
1
CAMILLE SHEATH
sizes 2-20
Bodice Front, H Cup
Cut 1 fabric on fold, 1 lining on fold
FOLD BACK THIS MARGIN
2 4 6 8 10 12 14 16 18 20
A9
FOLD BACK THIS MARGIN
A10

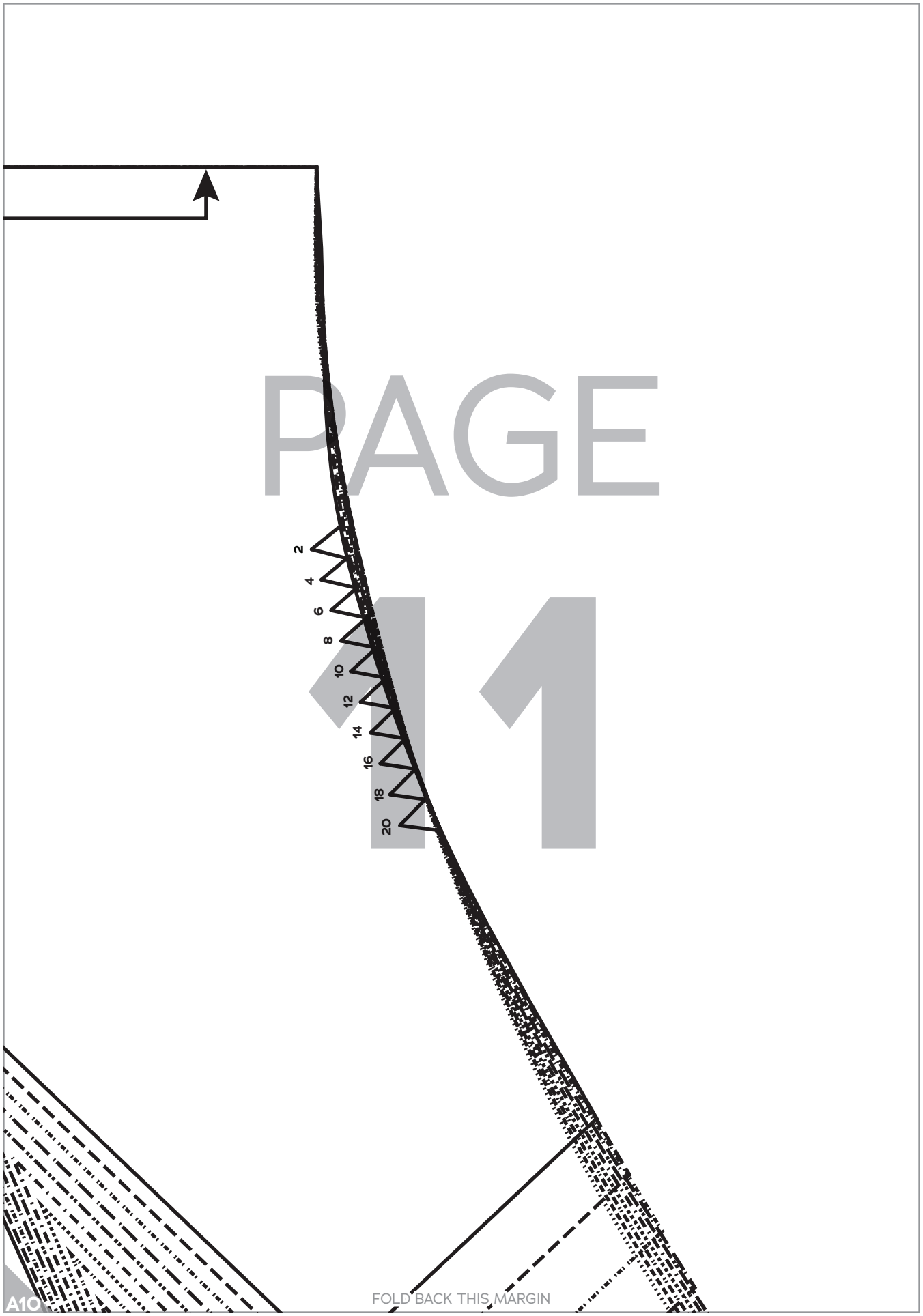
PAGE
11
2
4
6
8
10
12
14
16
18
20
A10
FOLD BACK THIS MARGIN

A1

CHARM PATTERNS by Gertie

1 CAMILLE SHEATH sizes 2-20

# Bodice Front, B/C Cup

Cut 1 fabric on fold, 1 lining on fold




PAGE 12

FOLD BACK THIS MARGIN

FOLD

FOLD BACK THIS MARGIN

B1

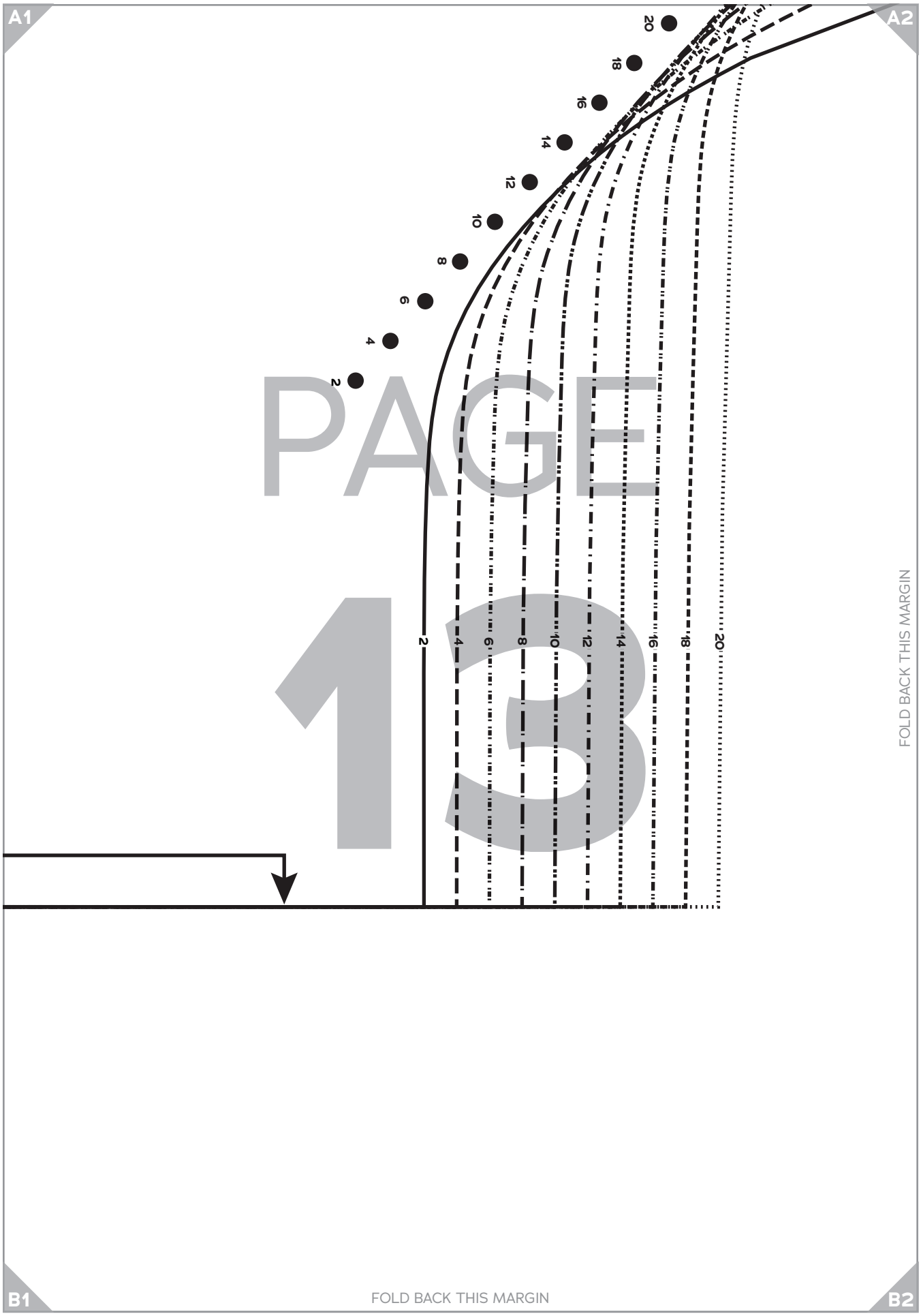
A1
A2
B1
B2
PAGE
13
2
4
6
8
10
12
14
16
18
20
FOLD BACK THIS MARGIN
FOLD BACK THIS MARGIN

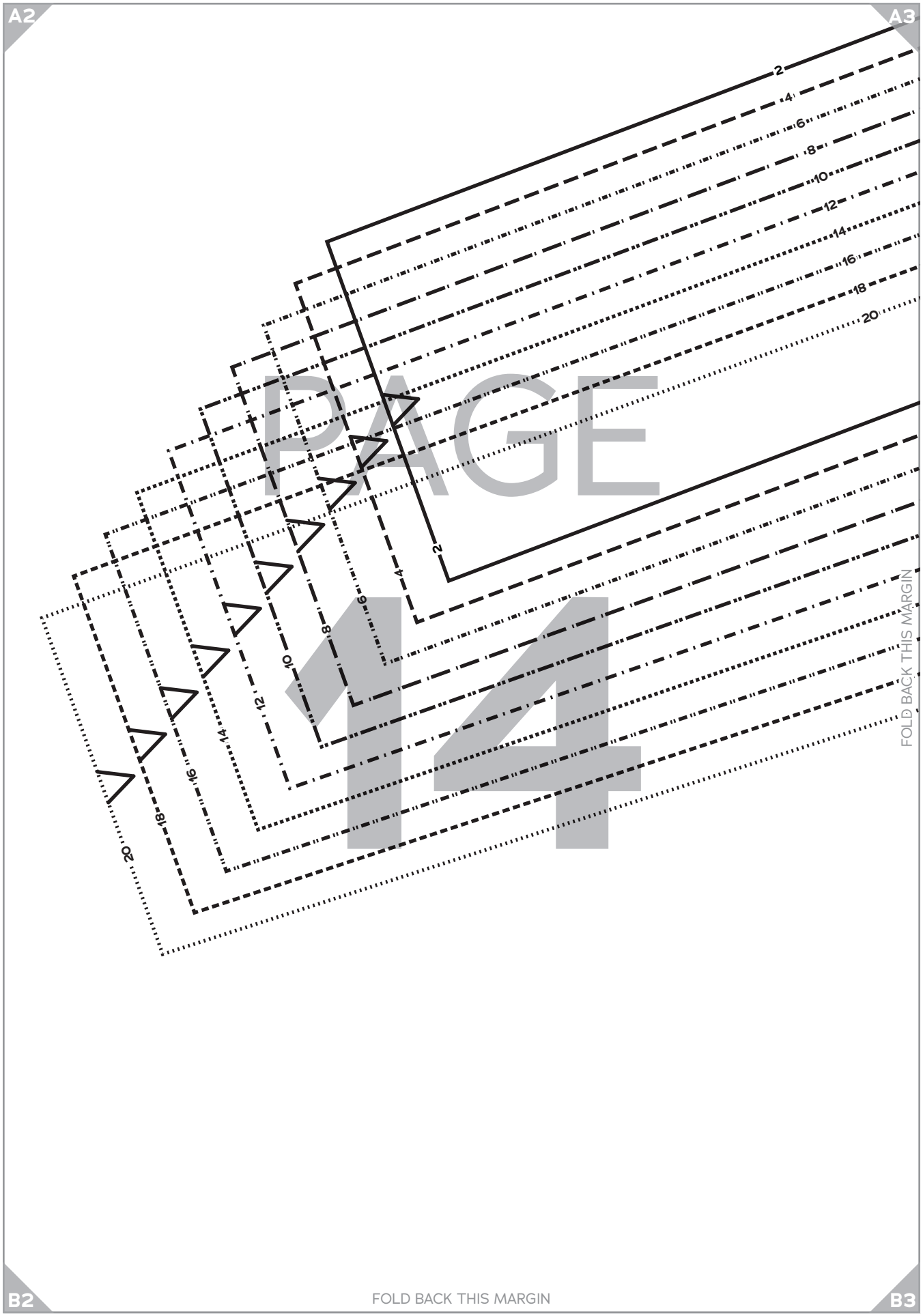
A2
A3
B2
B3
2
4
6
8
10
12
14
16
18
20
PAGE
14
FOLD BACK THIS MARGIN
FOLD BACK THIS MARGIN

A3
A4
2
4
6
8
10
12
14
16
18
20
PAGE
15
FOLD BACK THIS MARGIN
B3
FOLD BACK THIS MARGIN
B4

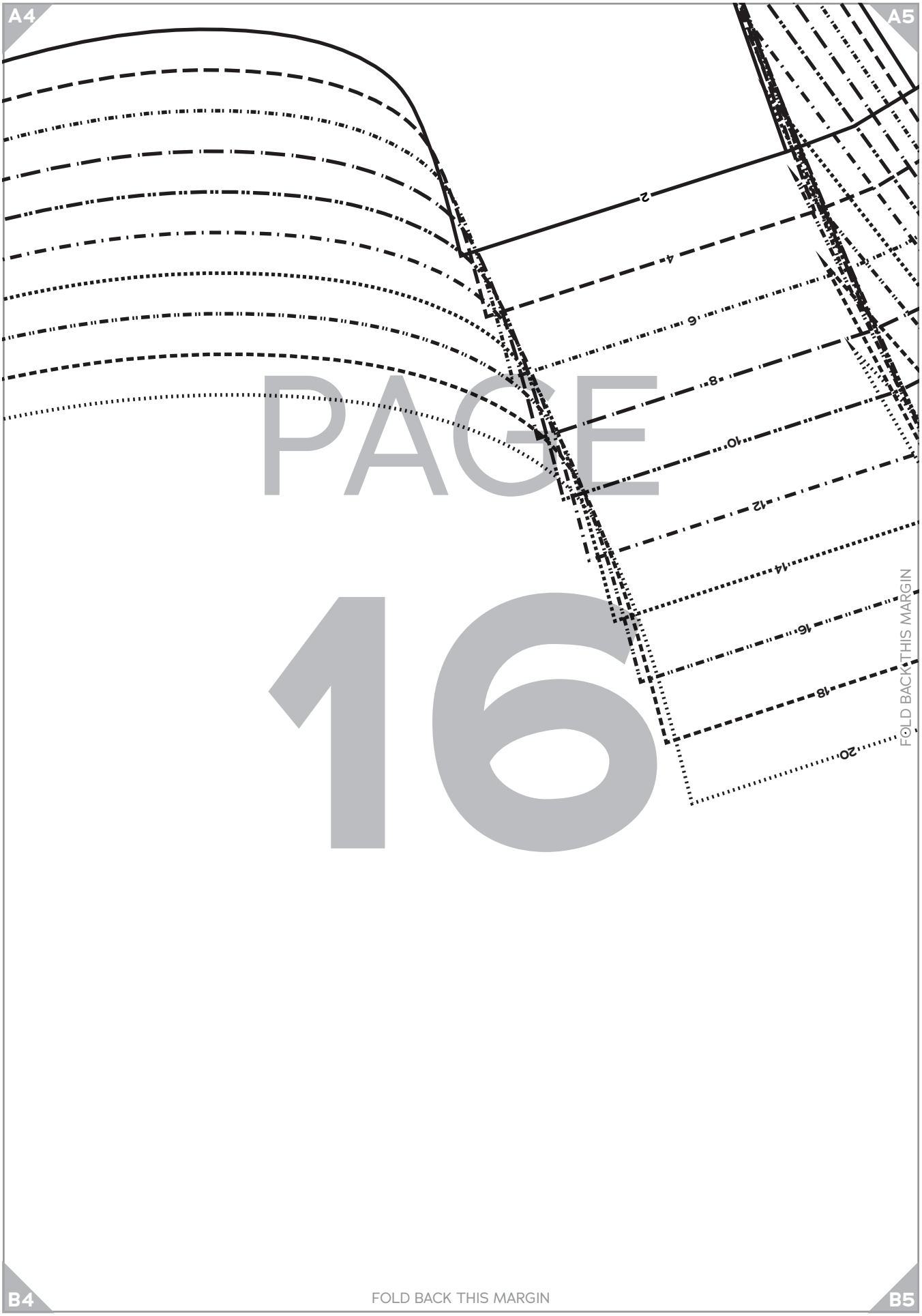
A4
A5
2
4
6
8
10
12
14
16
18
20
PAGE
16
FOLD BACK THIS MARGIN
B4
FOLD BACK THIS MARGIN
B5

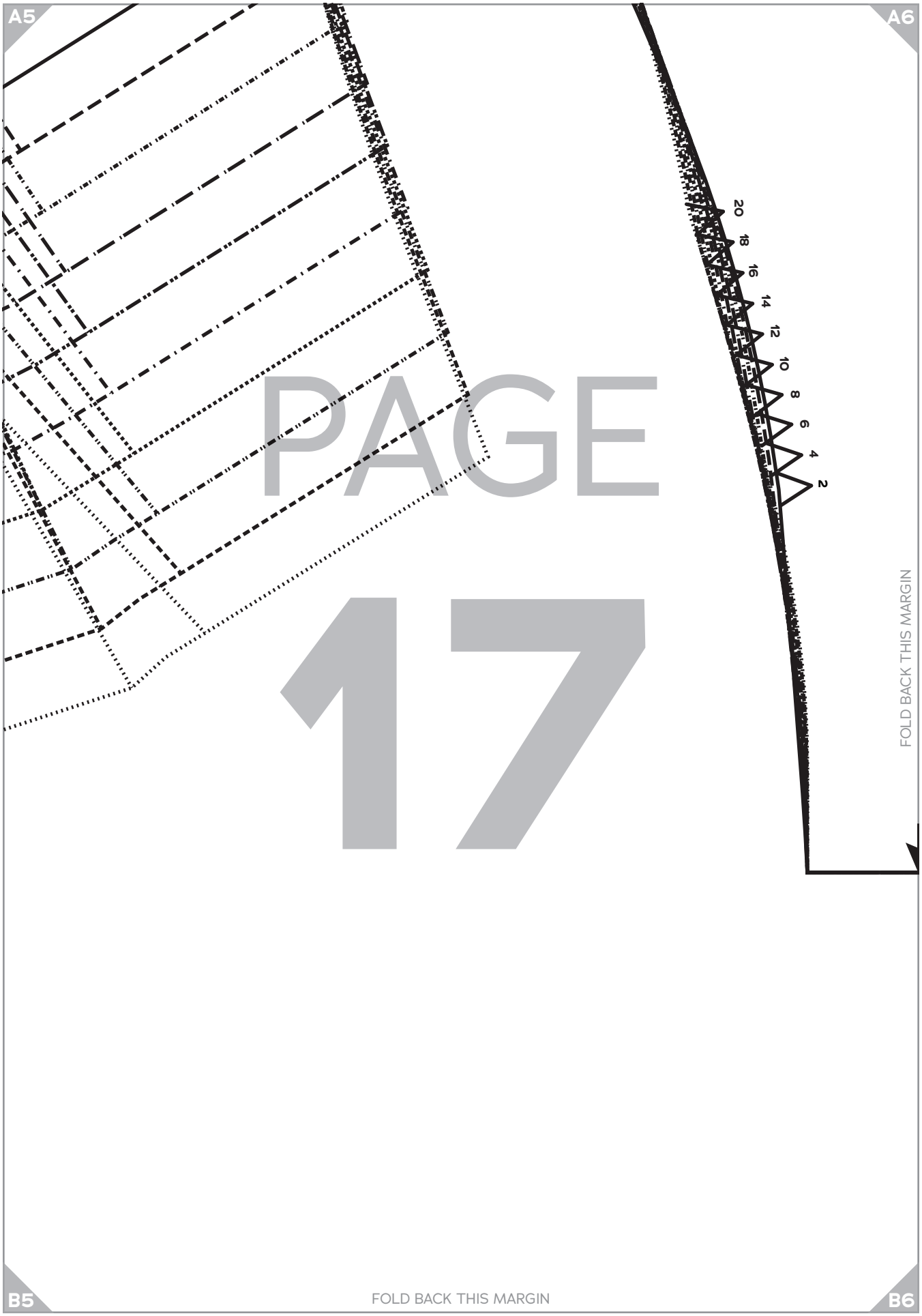
A5
A6
B5
B6
2
4
6
8
10
12
14
16
18
20
PAGE
17
FOLD BACK THIS MARGIN
FOLD BACK THIS MARGIN

A6

A7




FOLD BACK THIS MARGIN

PAGE 18

CHARM PATTERNS by Gertie

1 CAMILLE SHEATH sizes 2-20

Bodice Front, D/DD Cup

Cut 1 fabric on fold, 1 lining on fold

FOLD

B6

FOLD BACK THIS MARGIN

B7

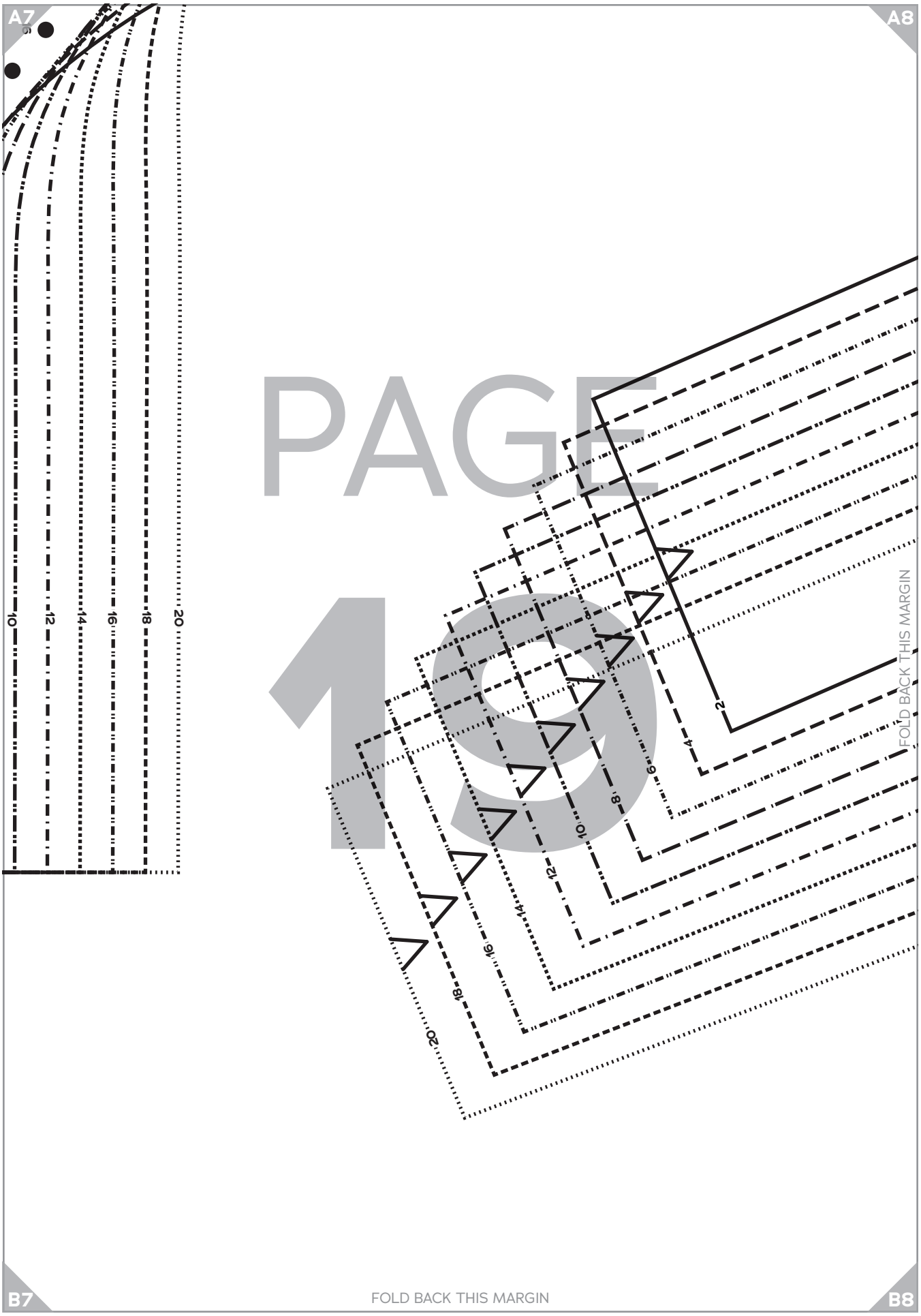
A7
A8
B7
B8
PAGE
19
2
4
6
8
10
12
14
16
18
20
FOLD BACK THIS MARGIN
FOLD BACK THIS MARGIN

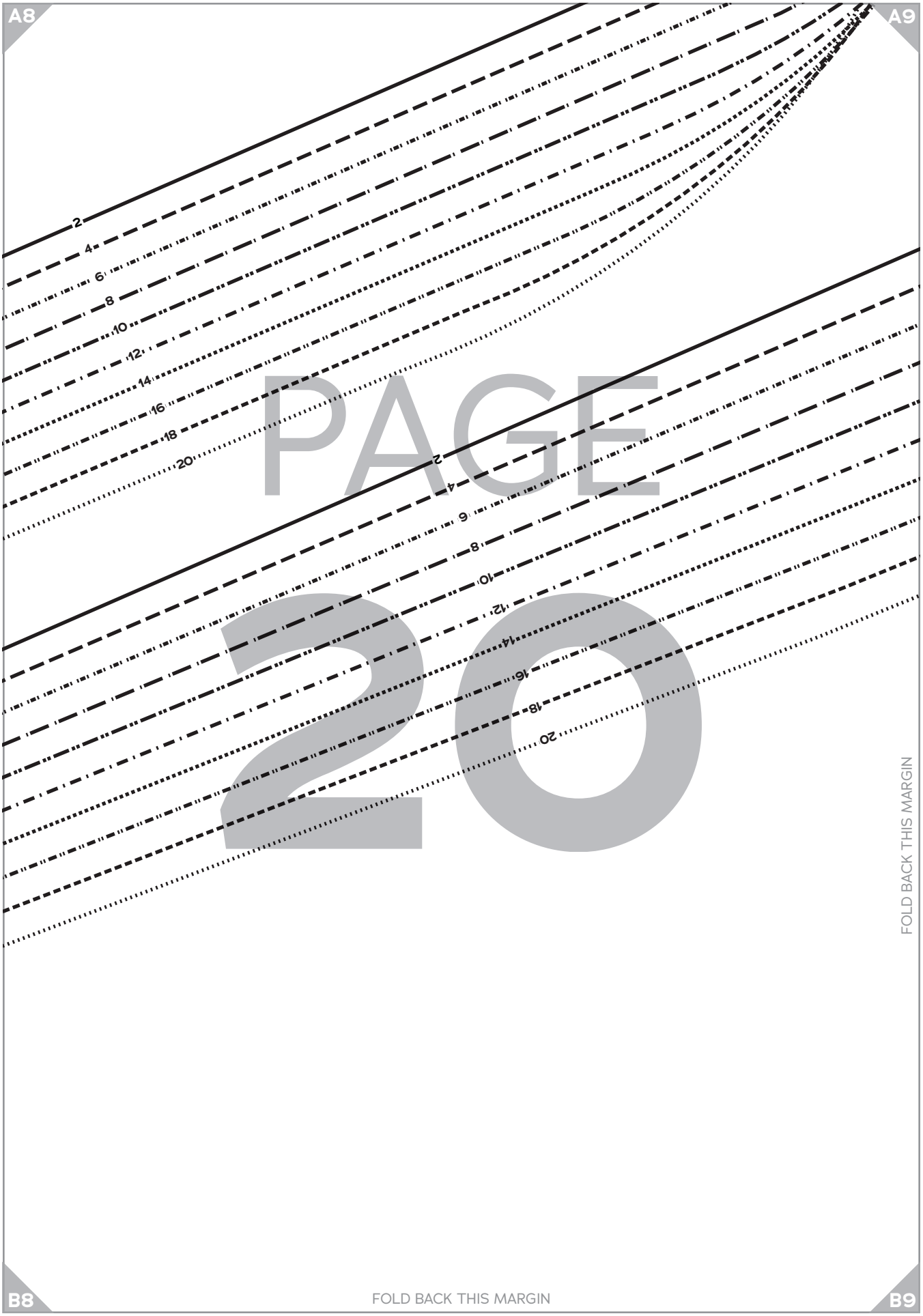
A8
A9
2
4
6
8
10
12
14
16
18
20
PAGE
20
FOLD BACK THIS MARGIN
B8
FOLD BACK THIS MARGIN
B9

A9 A10

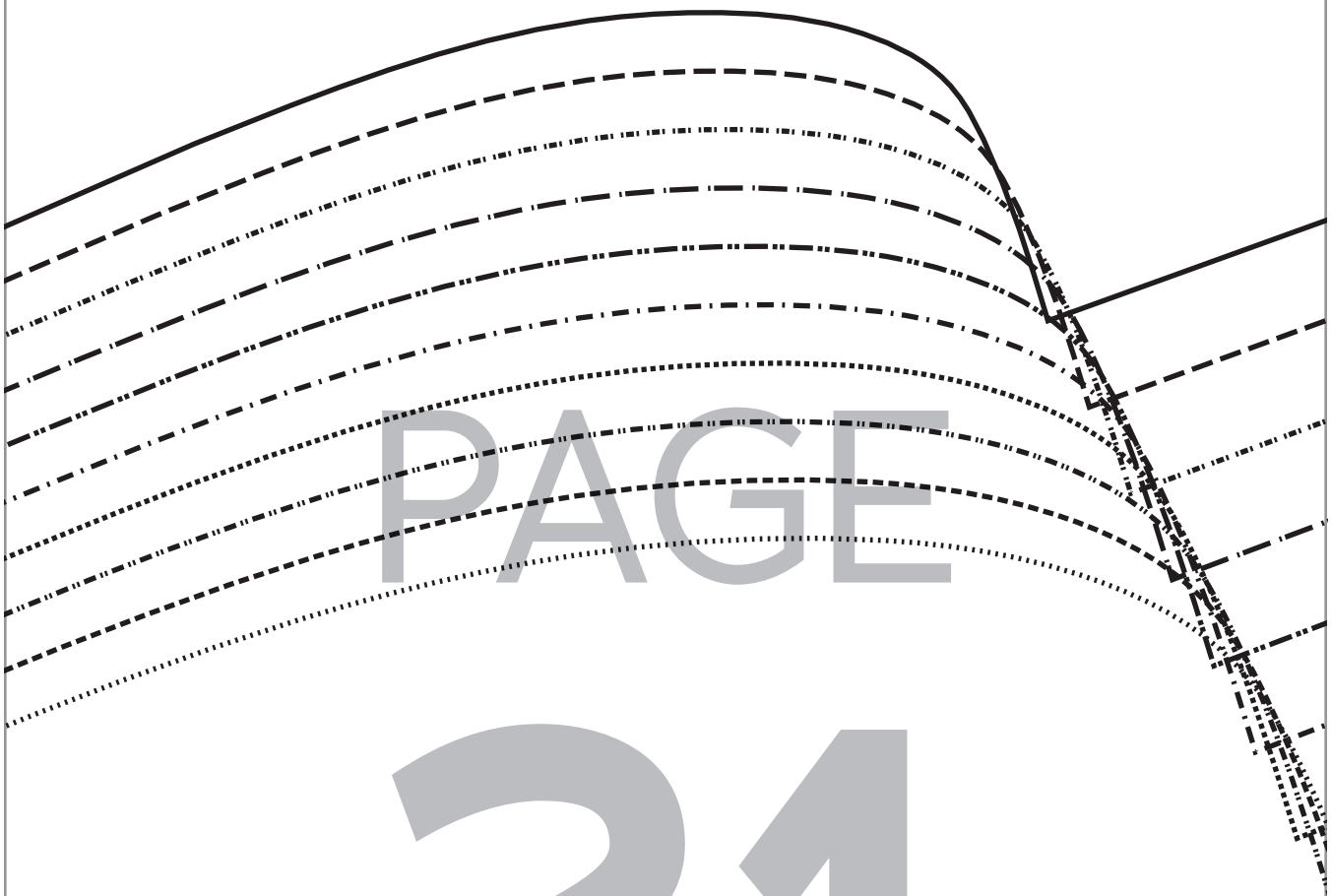

PAGE 21

FOLD BACK THIS MARGIN

FOLD BACK THIS MARGIN

B9 B10

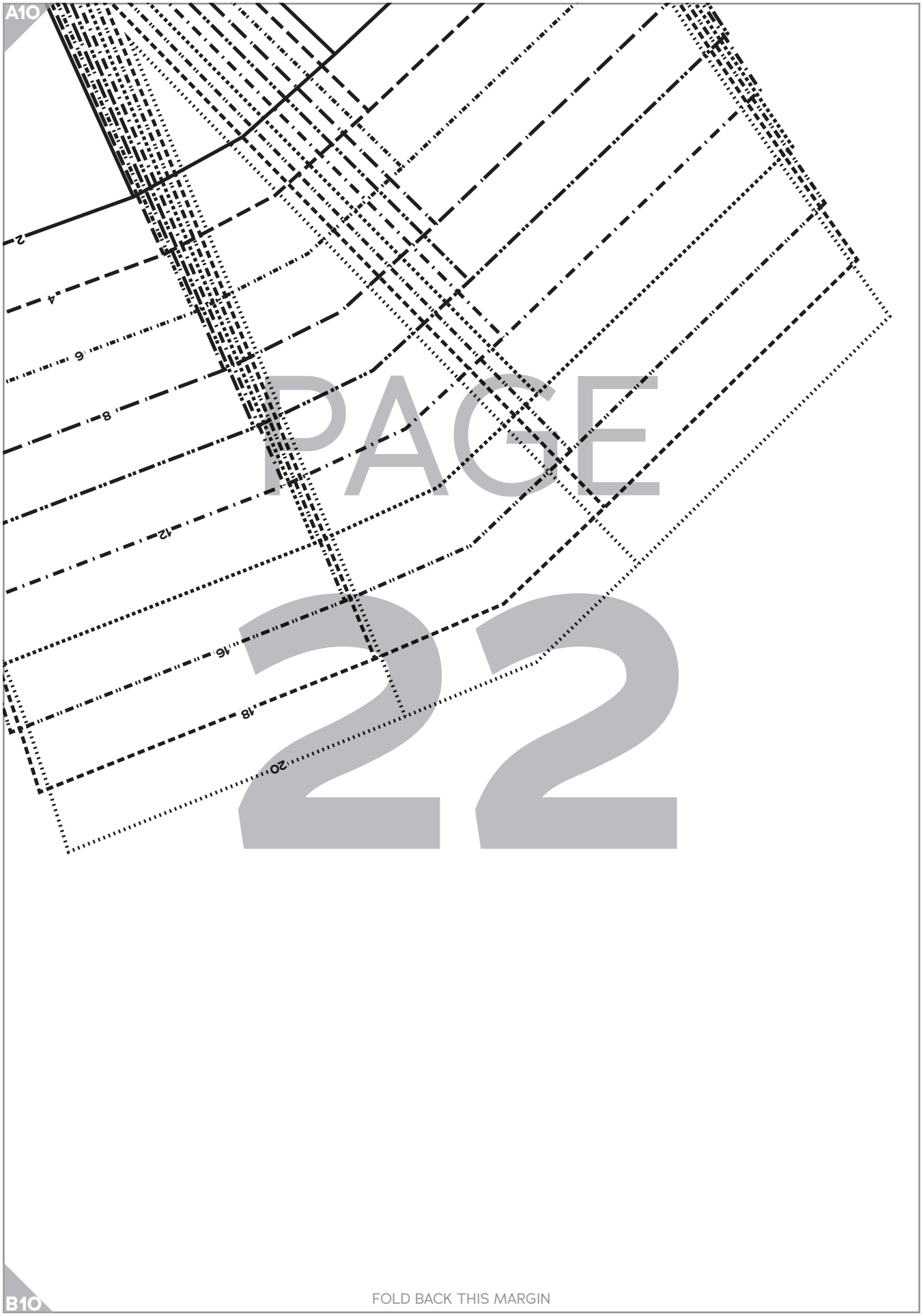
A10
2
4
6
8
12
16
18
20
PAGE
22
B10
FOLD BACK THIS MARGIN

B1

# PAGE 23

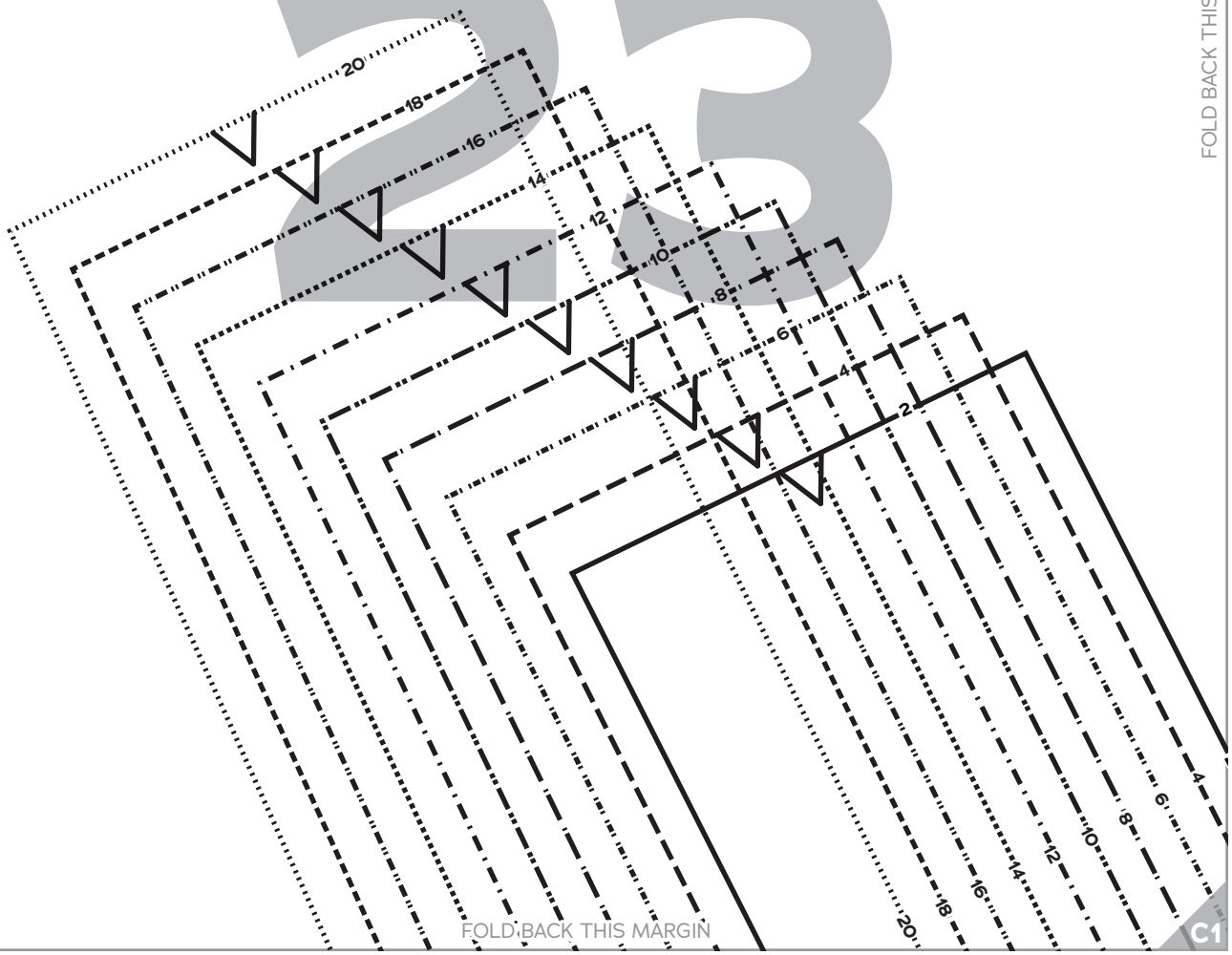


FOLD BACK THIS MARGIN

FOLD BACK THIS MARGIN

C1

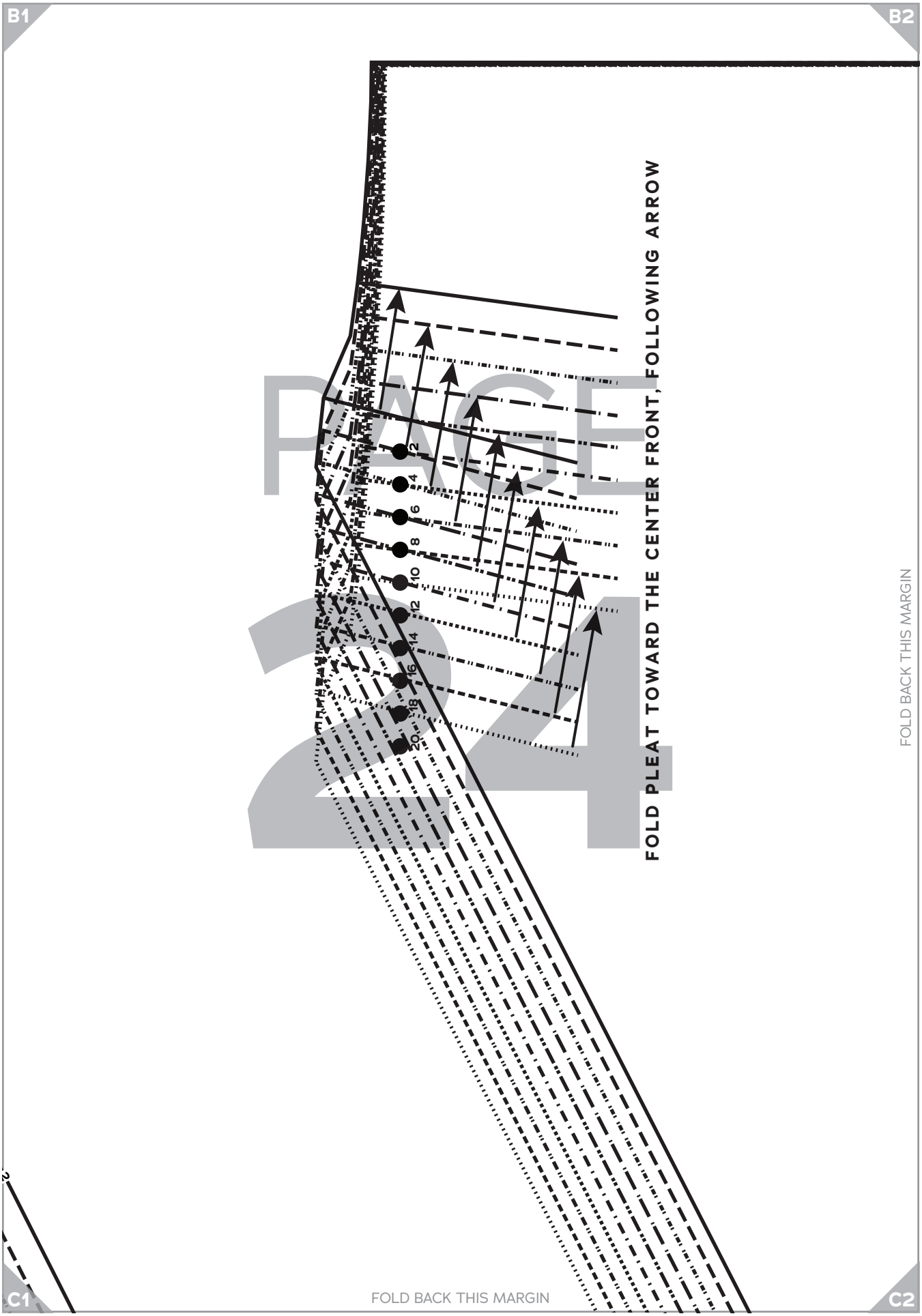
B1
B2
C1
C2
PAGE 24
FOLD PLEAT TOWARD THE CENTER FRONT, FOLLOWING ARROW
2
4
6
8
10
12
14
16
18
20
FOLD BACK THIS MARGIN
FOLD BACK THIS MARGIN

B2 B3

# PAGE 25

FOLD BACK THIS MARGIN

FOLD BACK THIS MARGIN

C2 C3

B3 B4

FOLD

# PAGE 26

CHARM PATTERNS by Gertie

CAMILLE SHEATH sizes 2-20

## Skirt Front

Cut 1 fabric on fold

FOLD BACK THIS MARGIN

FOLD BACK THIS MARGIN

C3 C4

B4 B5

# PAGE 27

FOLD BACK THIS MARGIN

C4 FOLD BACK THIS MARGIN C5

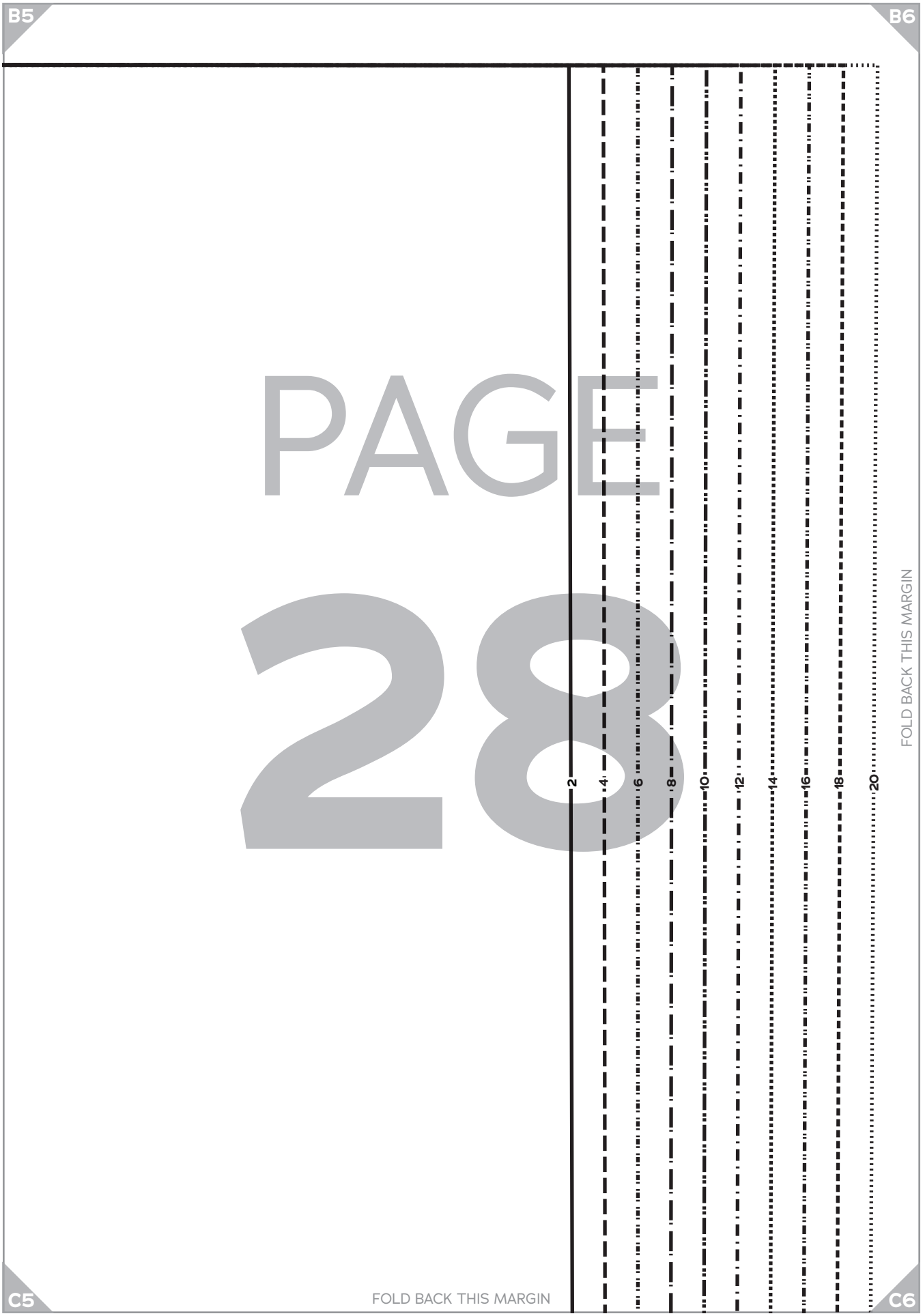
B5
B6
PAGE
28
2
4
6
8
10
12
14
16
18
20
FOLD BACK THIS MARGIN
C5
C6
FOLD BACK THIS MARGIN

B6 B7

PAGE 29

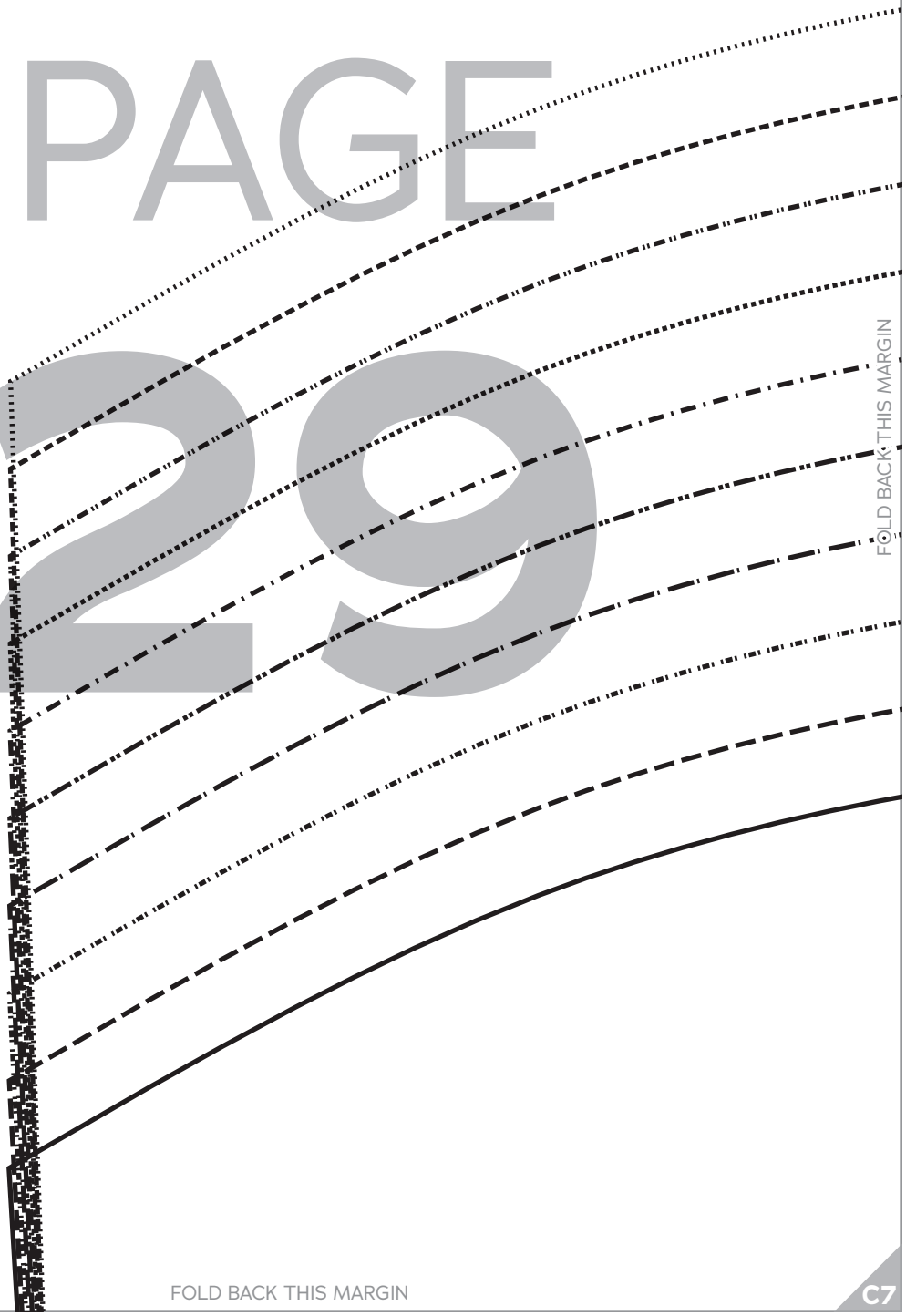

FOLD BACK THIS MARGIN

FOLD BACK THIS MARGIN

C6 C7

B7 B8

FOLD BACK THIS MARGIN

C7 C8

FOLD BACK THIS MARGIN

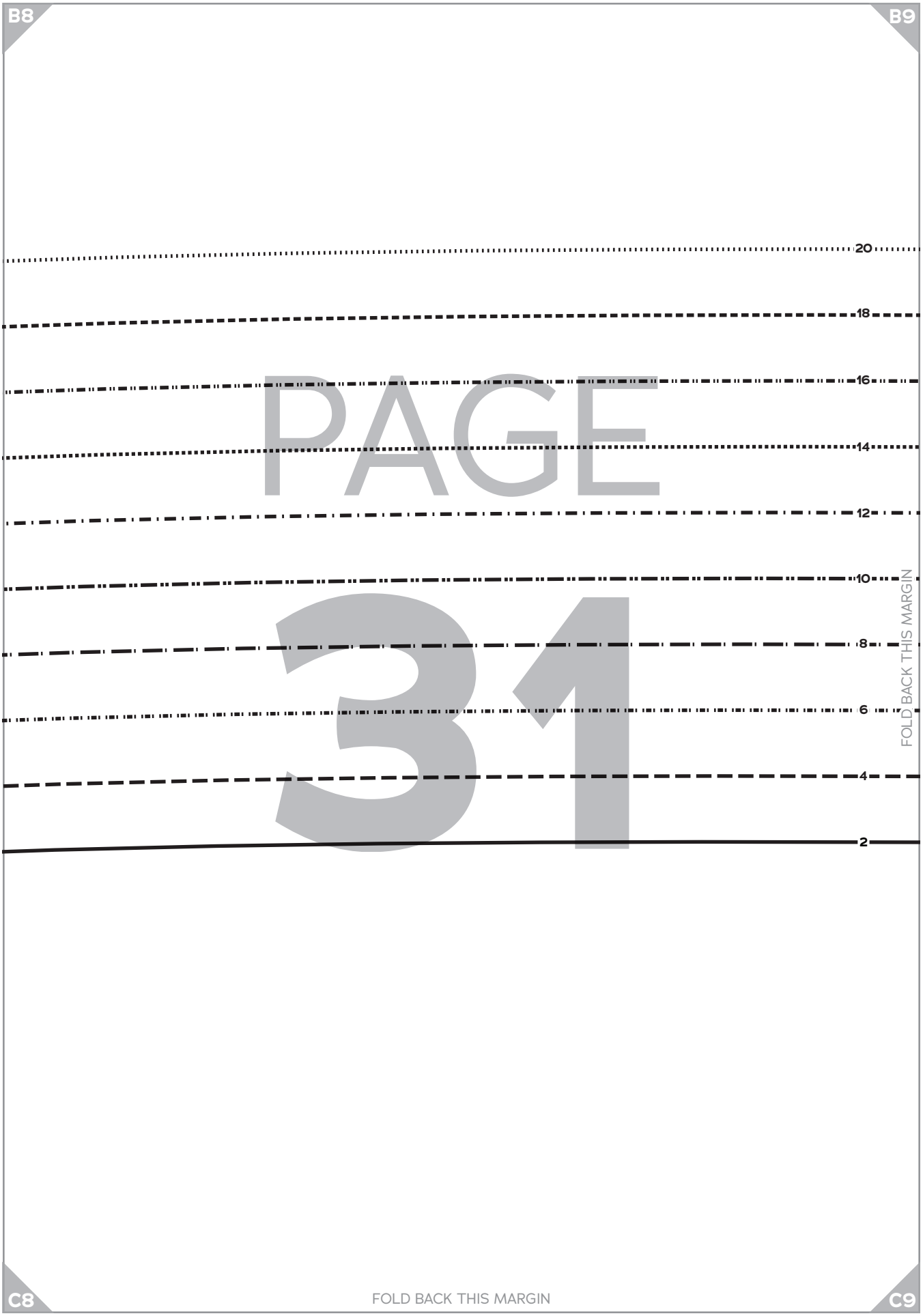
B8
B9
20
18
16
14
12
10
8
6
4
2
PAGE
31
FOLD BACK THIS MARGIN
C8
FOLD BACK THIS MARGIN
C9

B9

B10

PAGE

32

FOLD BACK THIS MARGIN

C9

FOLD BACK THIS MARGIN

C10

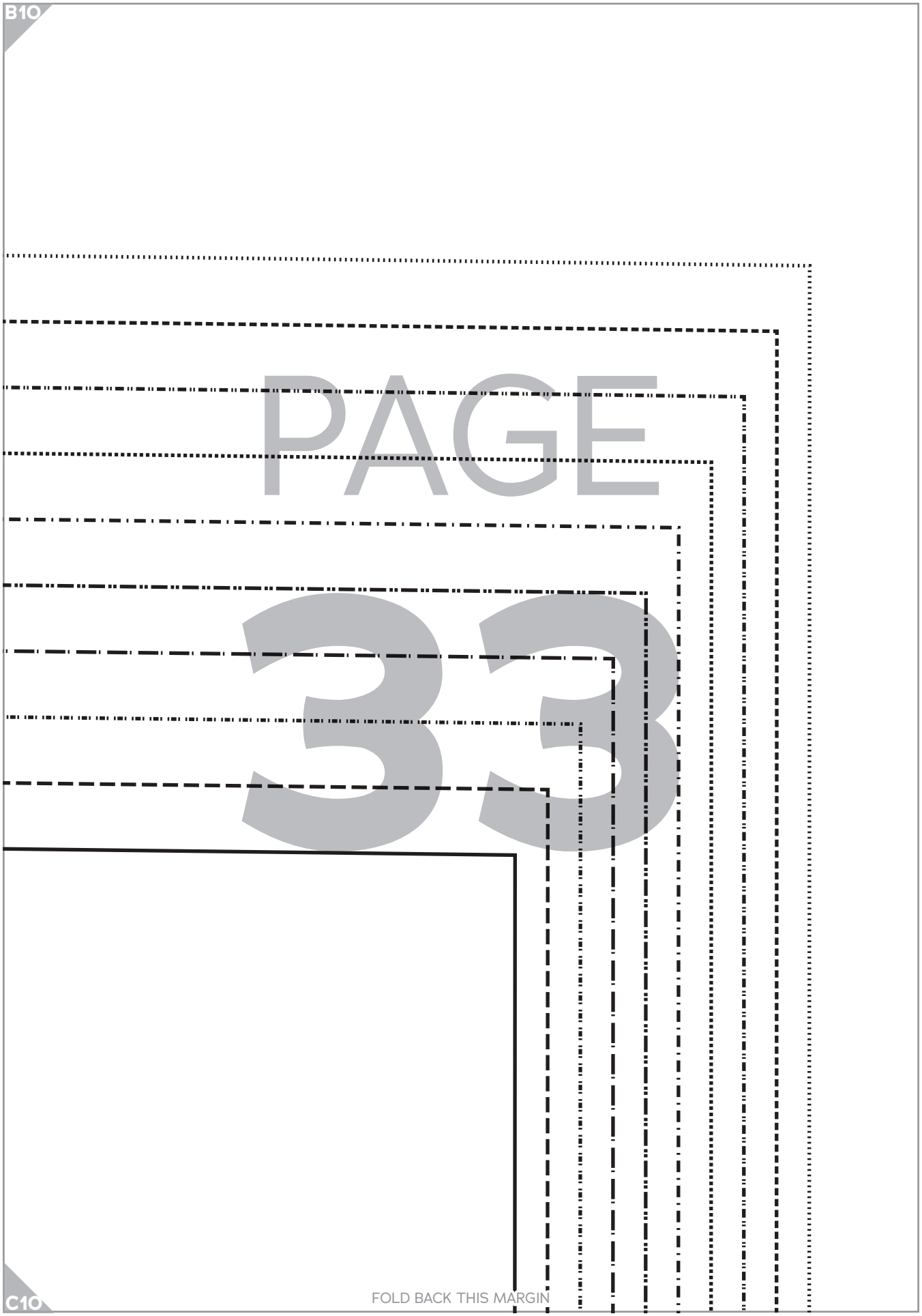
B10
PAGE
33
C10
FOLD BACK THIS MARGIN

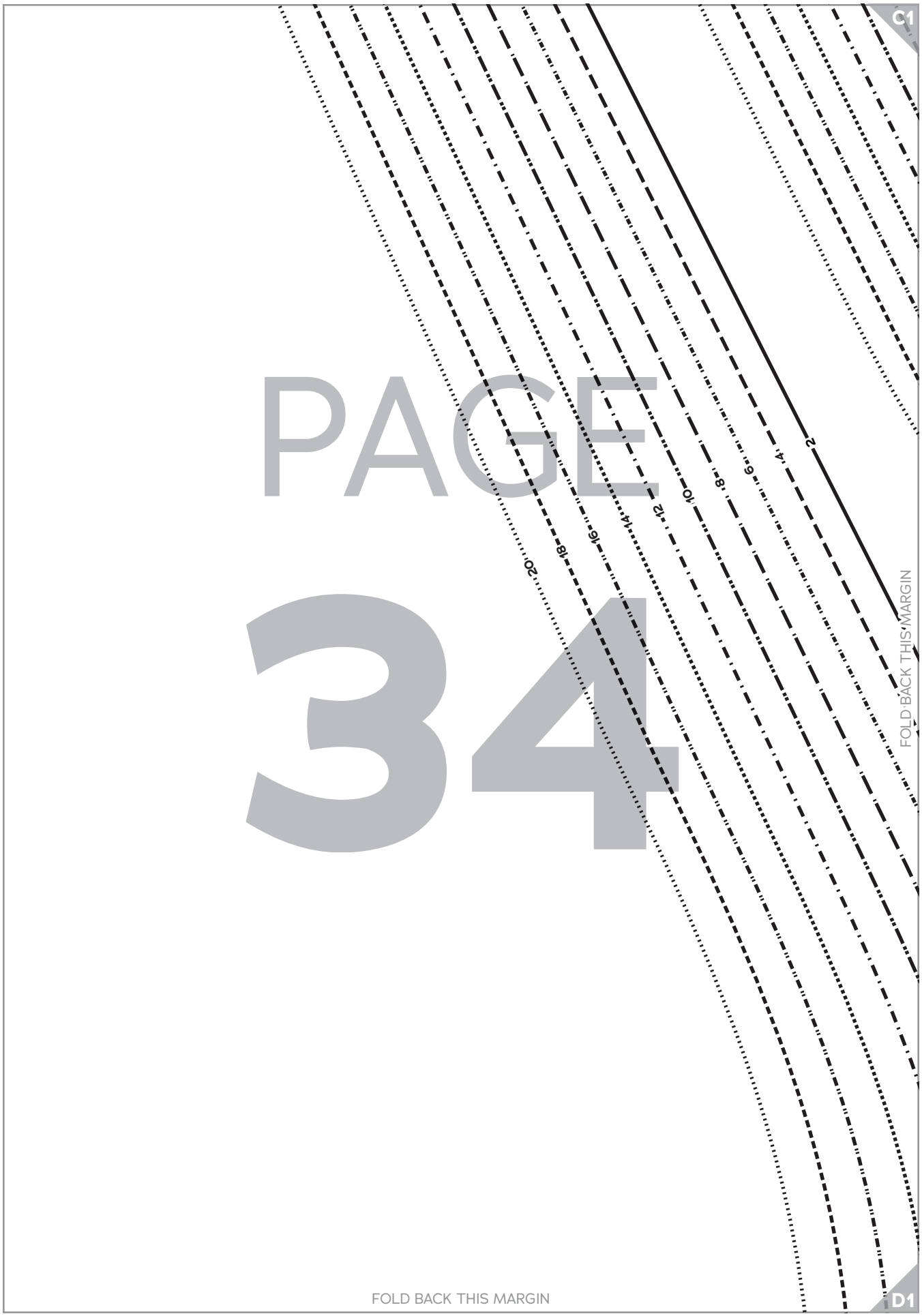
C1
2
4
6
8
10
12
14
16
18
20
FOLD BACK THIS MARGIN
D1
FOLD BACK THIS MARGIN
PAGE
34

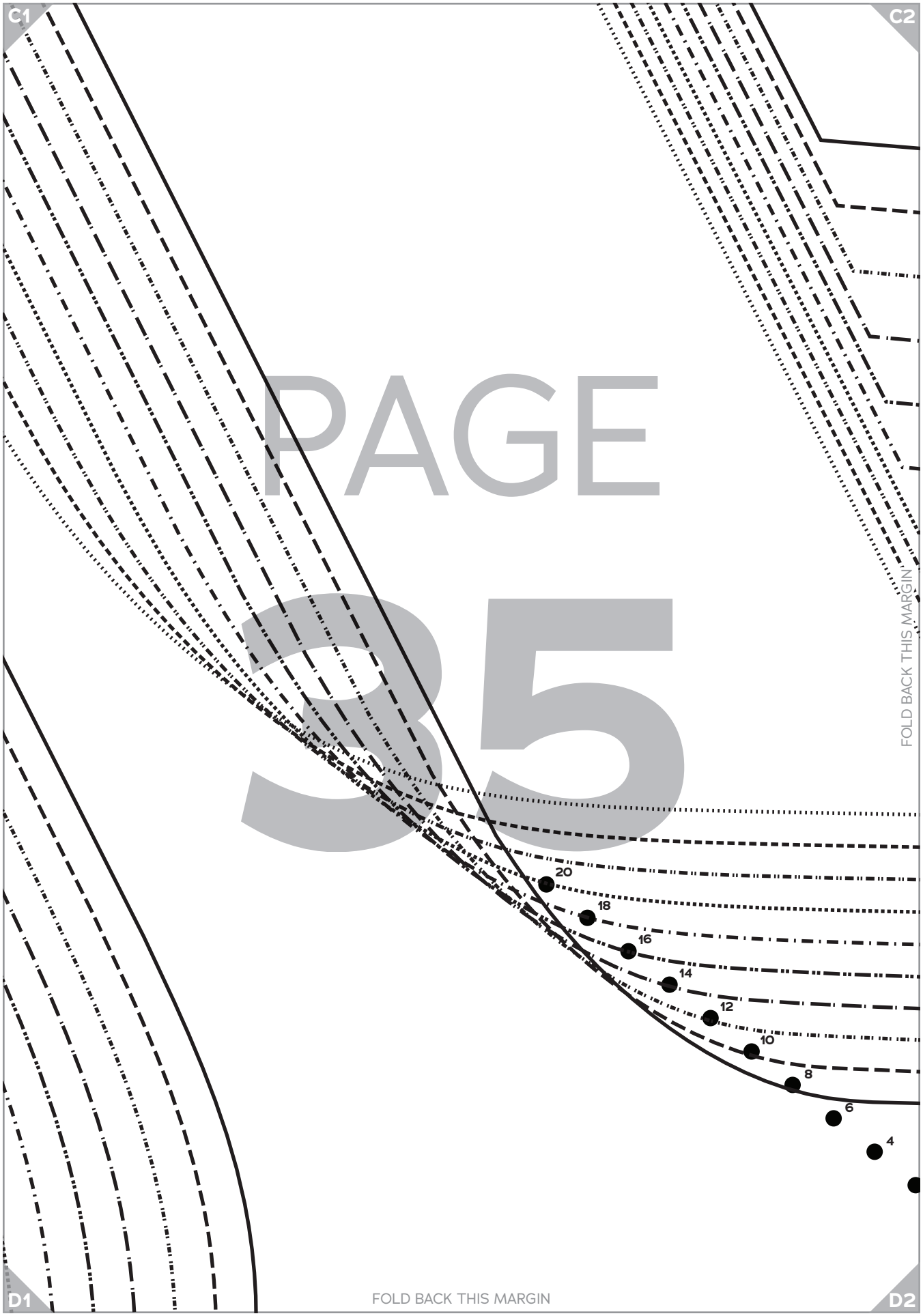
C1
C2
PAGE
35
FOLD BACK THIS MARGIN
20
18
16
14
12
10
8
6
4
D1
FOLD BACK THIS MARGIN
D2

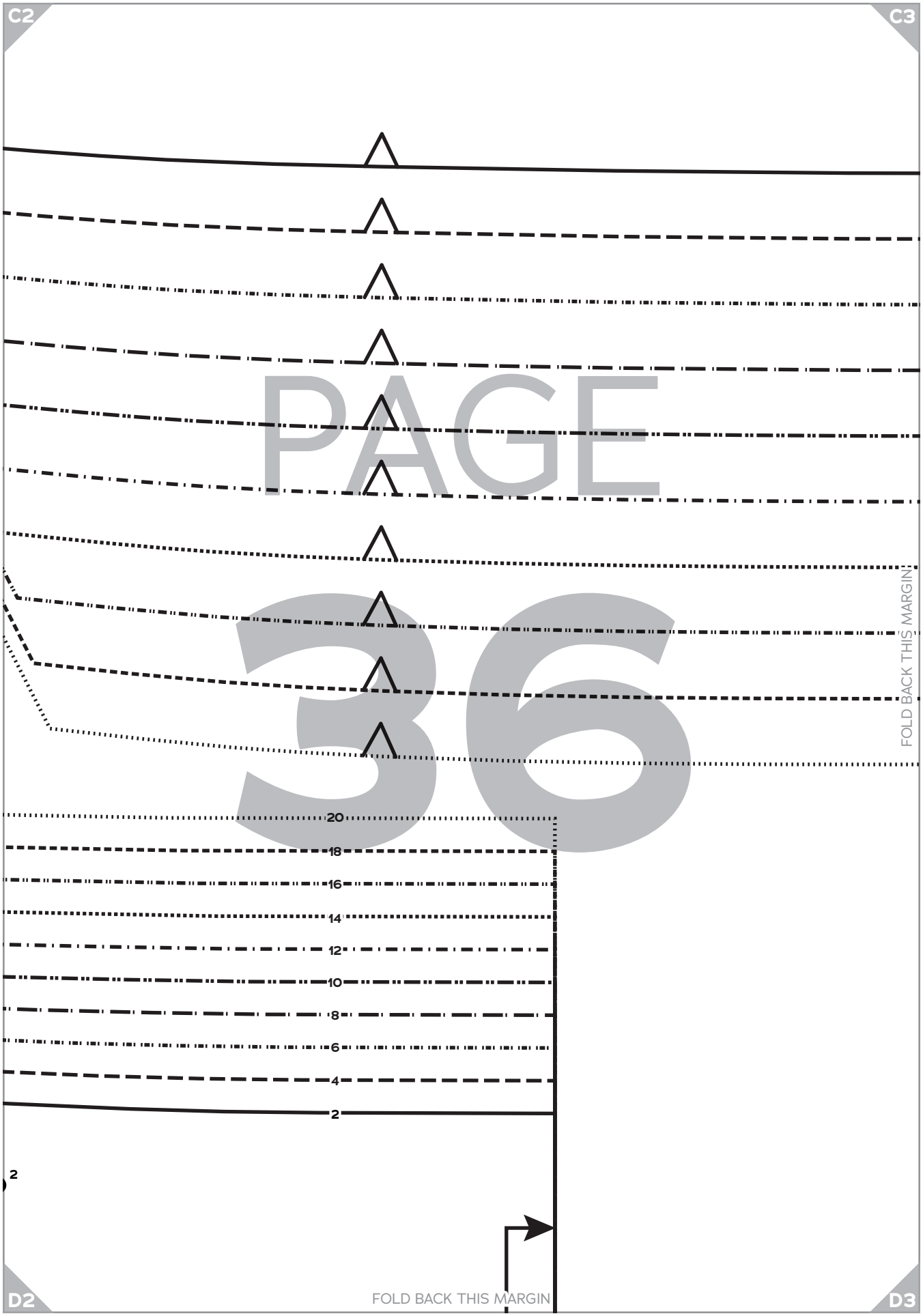
C2
C3
PAGE
36
FOLD BACK THIS MARGIN
20
18
16
14
12
10
8
6
4
2
2
D2
FOLD BACK THIS MARGIN
D3

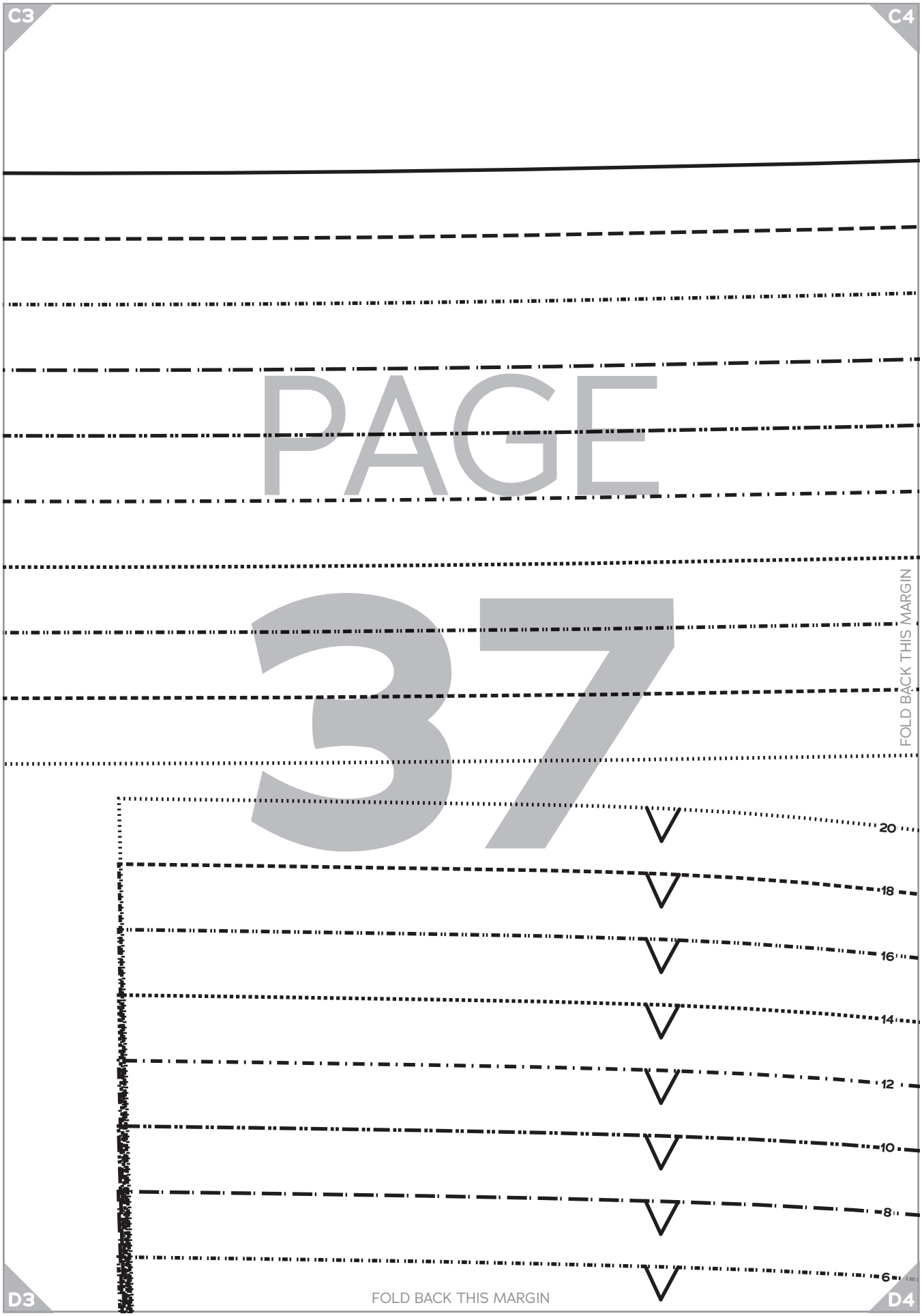
C3
C4
PAGE
37
FOLD BACK THIS MARGIN
20
18
16
14
12
10
8
6
D3
FOLD BACK THIS MARGIN
D4

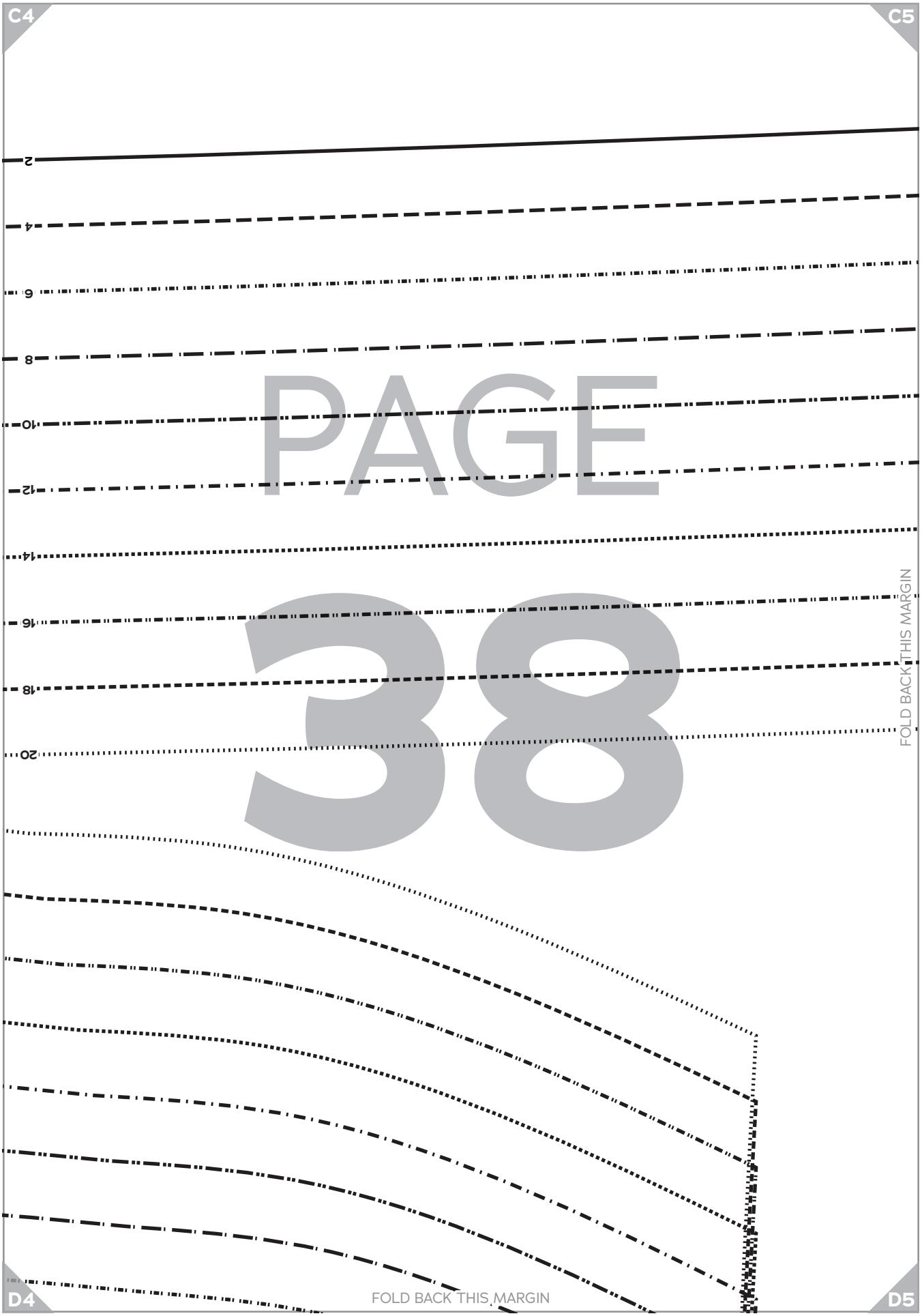
C4
C5
2
4
6
8
10
12
14
16
18
20
PAGE
38
FOLD BACK THIS MARGIN
D4
FOLD BACK THIS MARGIN
D5

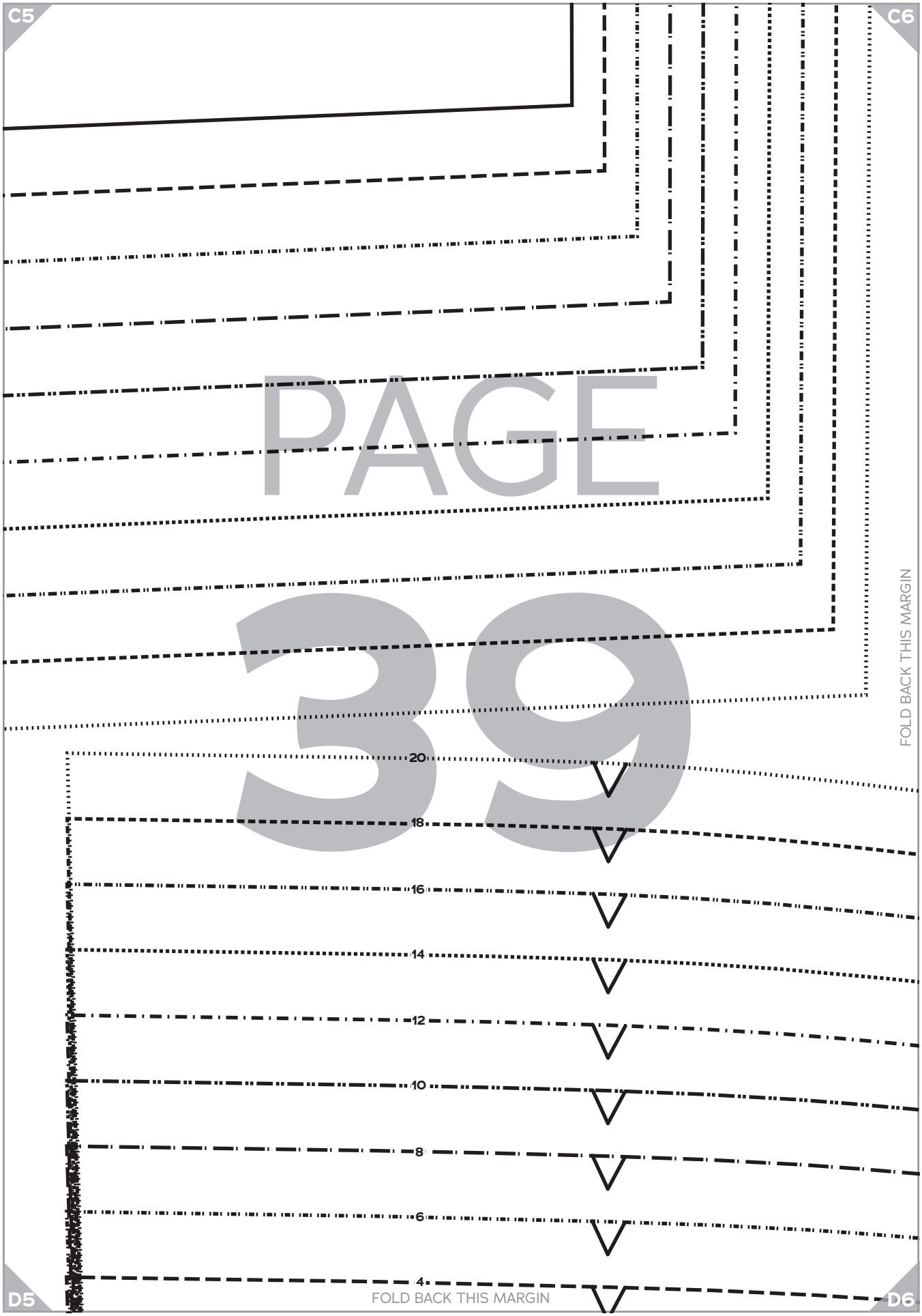
C5
C6
PAGE
39
FOLD BACK THIS MARGIN
20
18
16
14
12
10
8
6
4
FOLD BACK THIS MARGIN
D5
D6

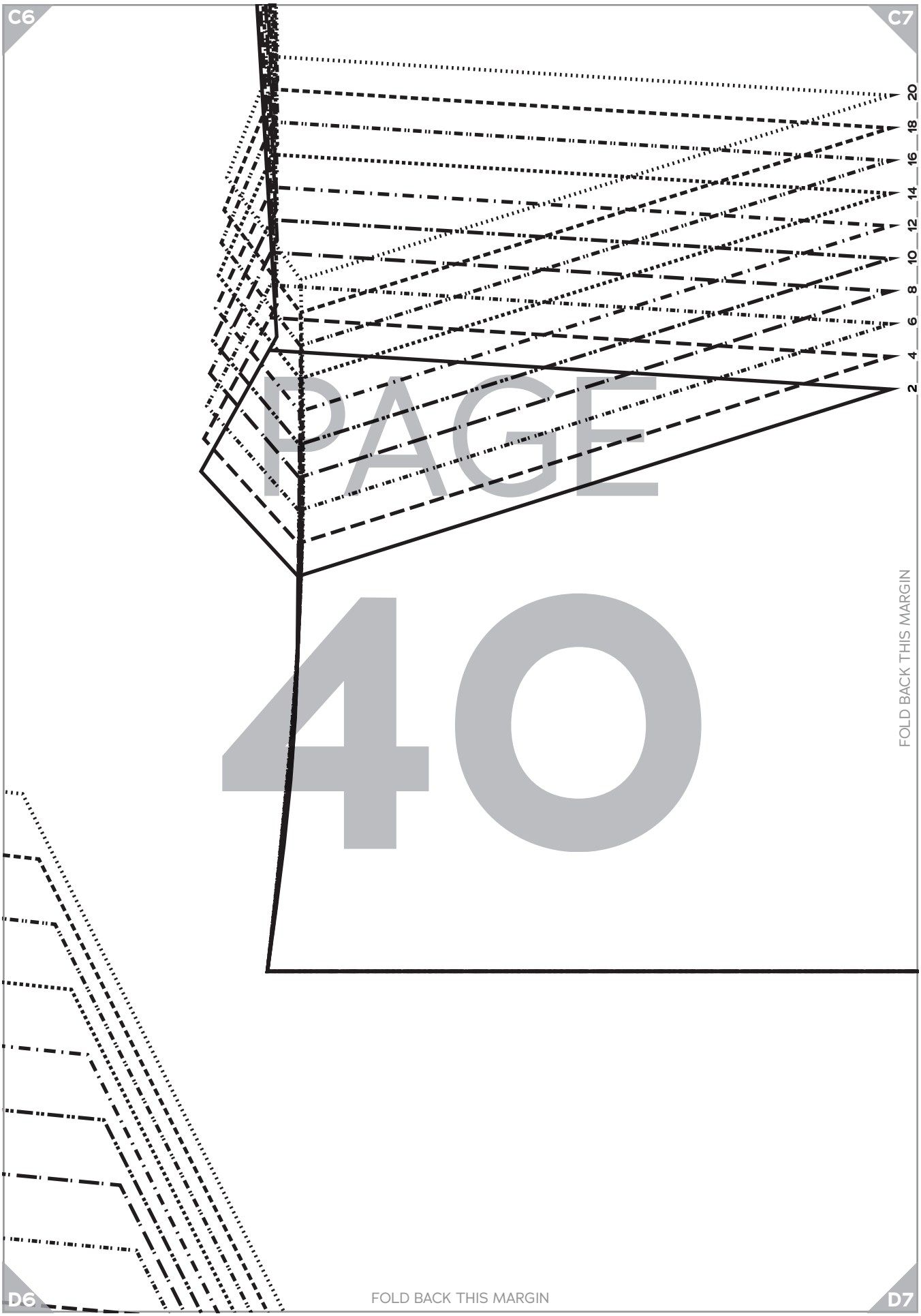
C6
C7
20
18
16
14
12
10
8
6
4
2
PAGE
40
FOLD BACK THIS MARGIN
D6
FOLD BACK THIS MARGIN
D7

C7 C8

# PAGE 41

FOLD BACK THIS MARGIN

ZIPPER

2 4 6 8 10 12 14 16 18

D7 D8

FOLD BACK THIS MARGIN

C8 C9

CHARM PATTERNS by Gertie

7 CAMILLE SHEATH sizes 2-20

# Skirt Back

Cut 2 fabric

GRAINLINE

PAGE 42

FOLD BACK THIS MARGIN

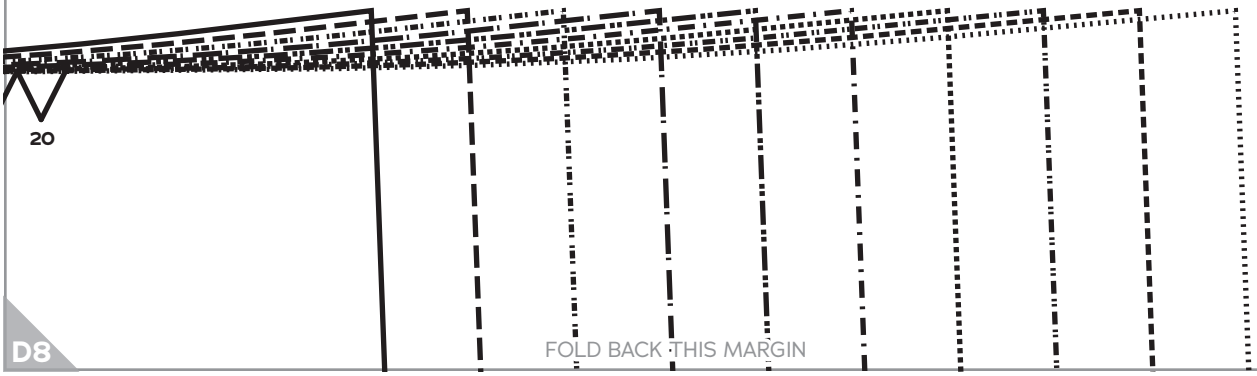


FOLD BACK THIS MARGIN

D8 D9

C9

C10

PAGE

43

FOLD BACK THIS MARGIN

SLIT OPENING

2 4 6 8 10 12 14 16 18 20

D9

FOLD BACK THIS MARGIN

D10

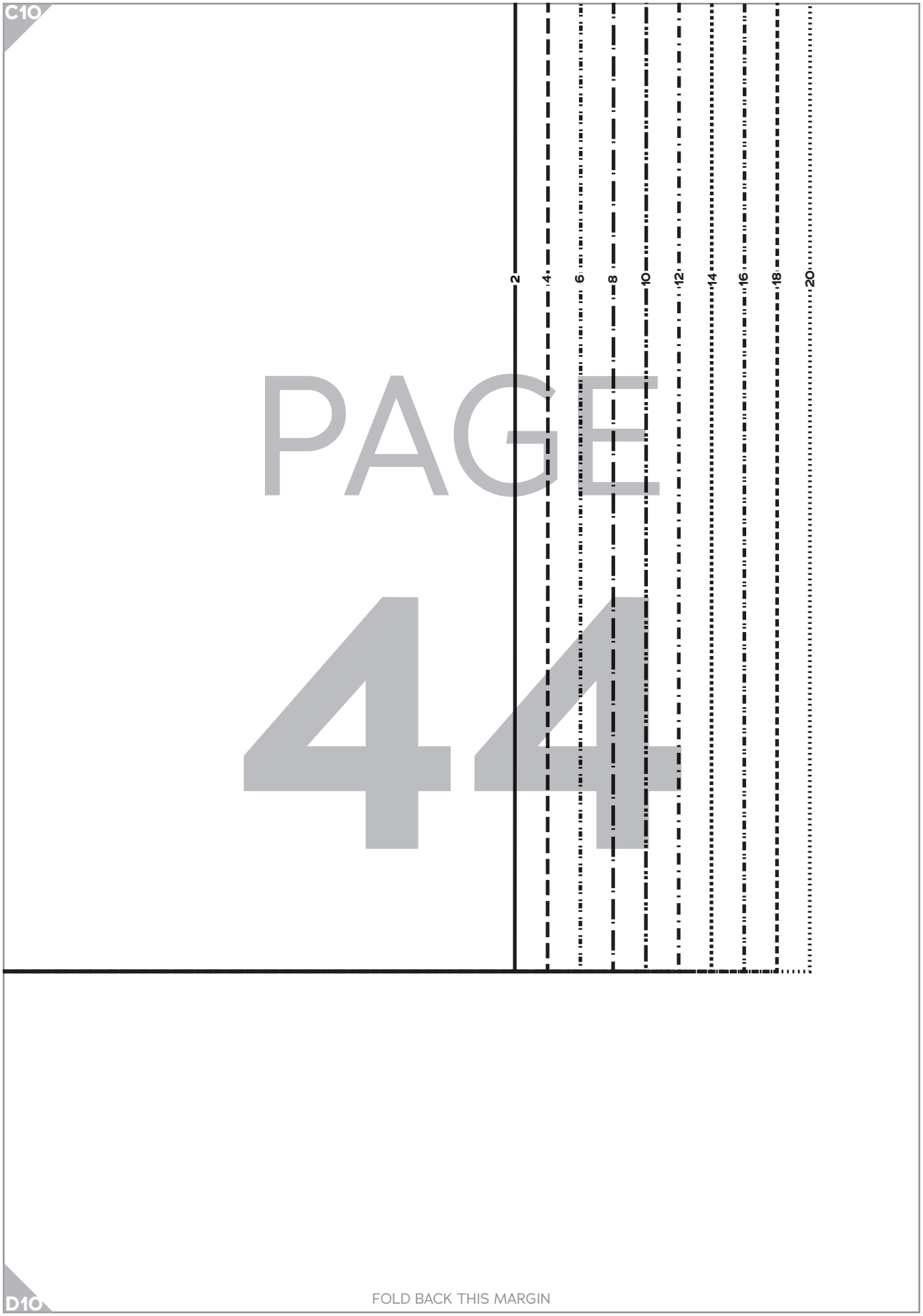
C10
2
4
6
8
10
12
14
16
18
20
PAGE
44
D10
FOLD BACK THIS MARGIN

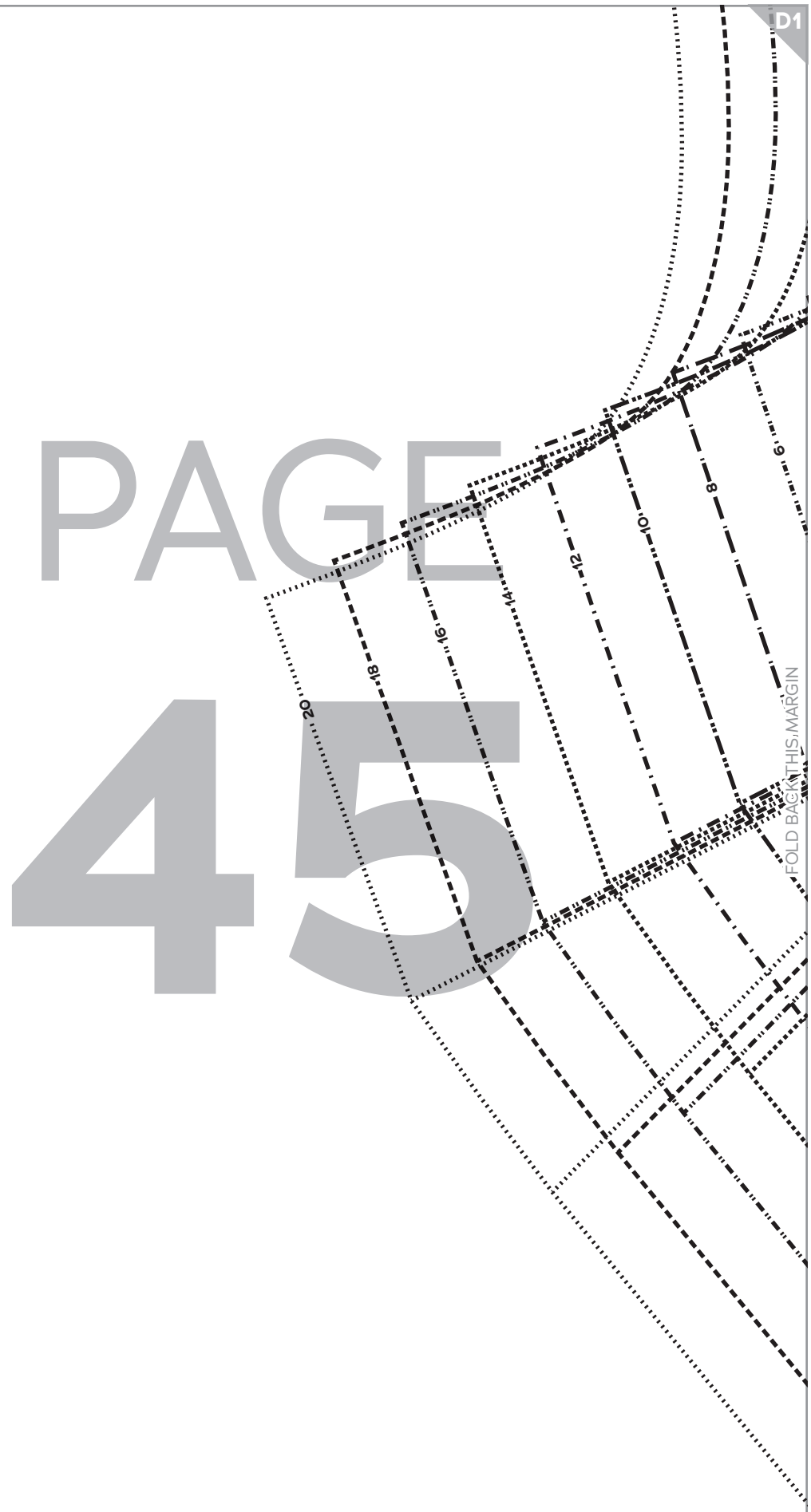
D1
6
8
10
12
14
16
18
20
FOLD BACK THIS MARGIN
PAGE
45

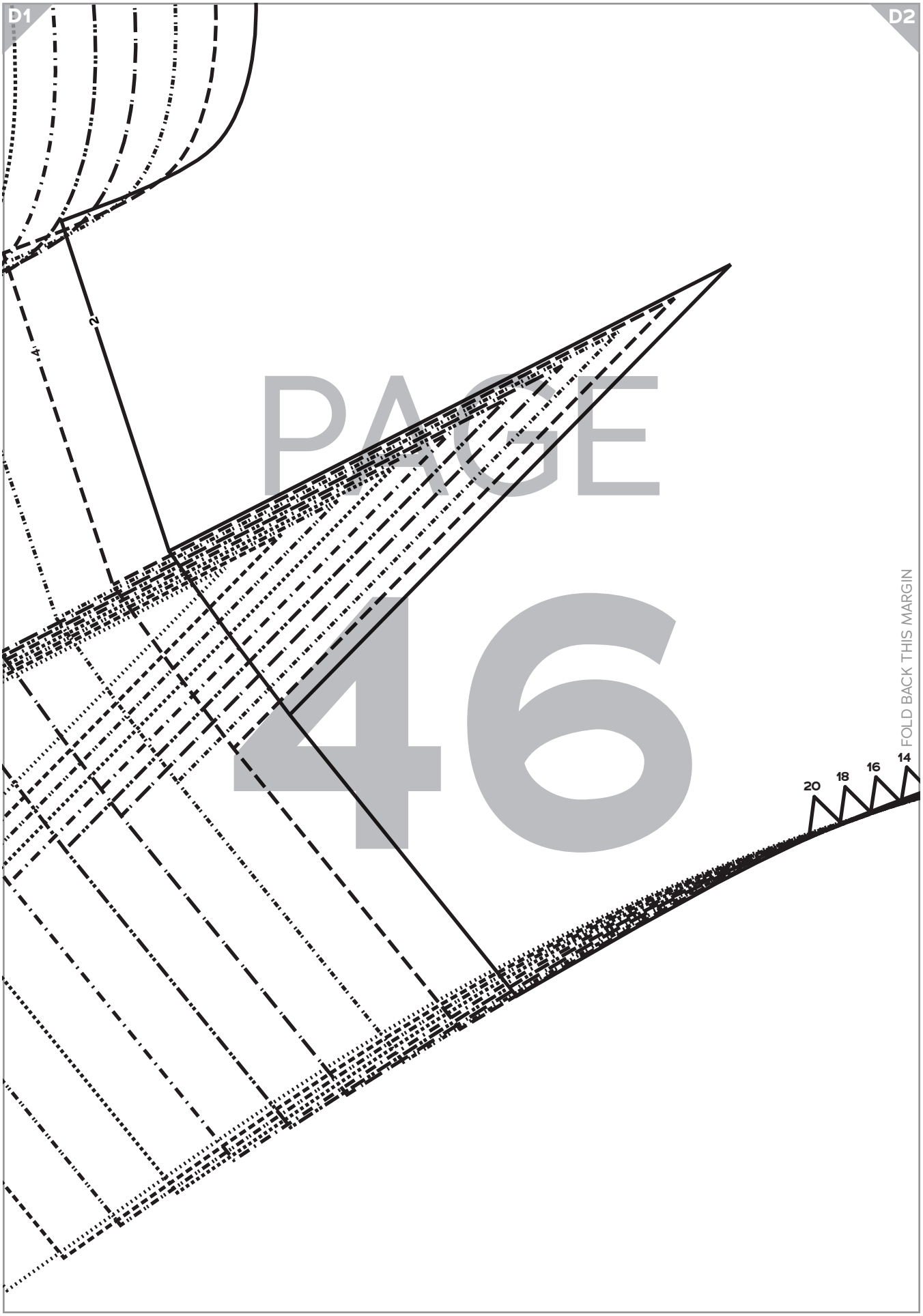
D1
D2
PAGE
46
FOLD BACK THIS MARGIN
20
18
16
14
2
4

D2 D3

CHARM PATTERNS by Gertie

# 1 CAMILLE SHEATH sizes 2-20

## Bodice Front, F/G Cup

Cut 1 fabric on fold,
1 lining on fold

FOLD

PAGE 47

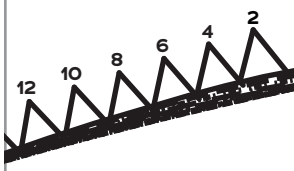


FOLD BACK THIS MARGIN

D3
D4
4
2
GRAINLINE
PAGE
48
CHARM PATTERNS by Gertie
CAMILLE SHEATH
sizes 2-20
Skirt Side Front
Cut 2 fabric
FOLD BACK THIS MARGIN

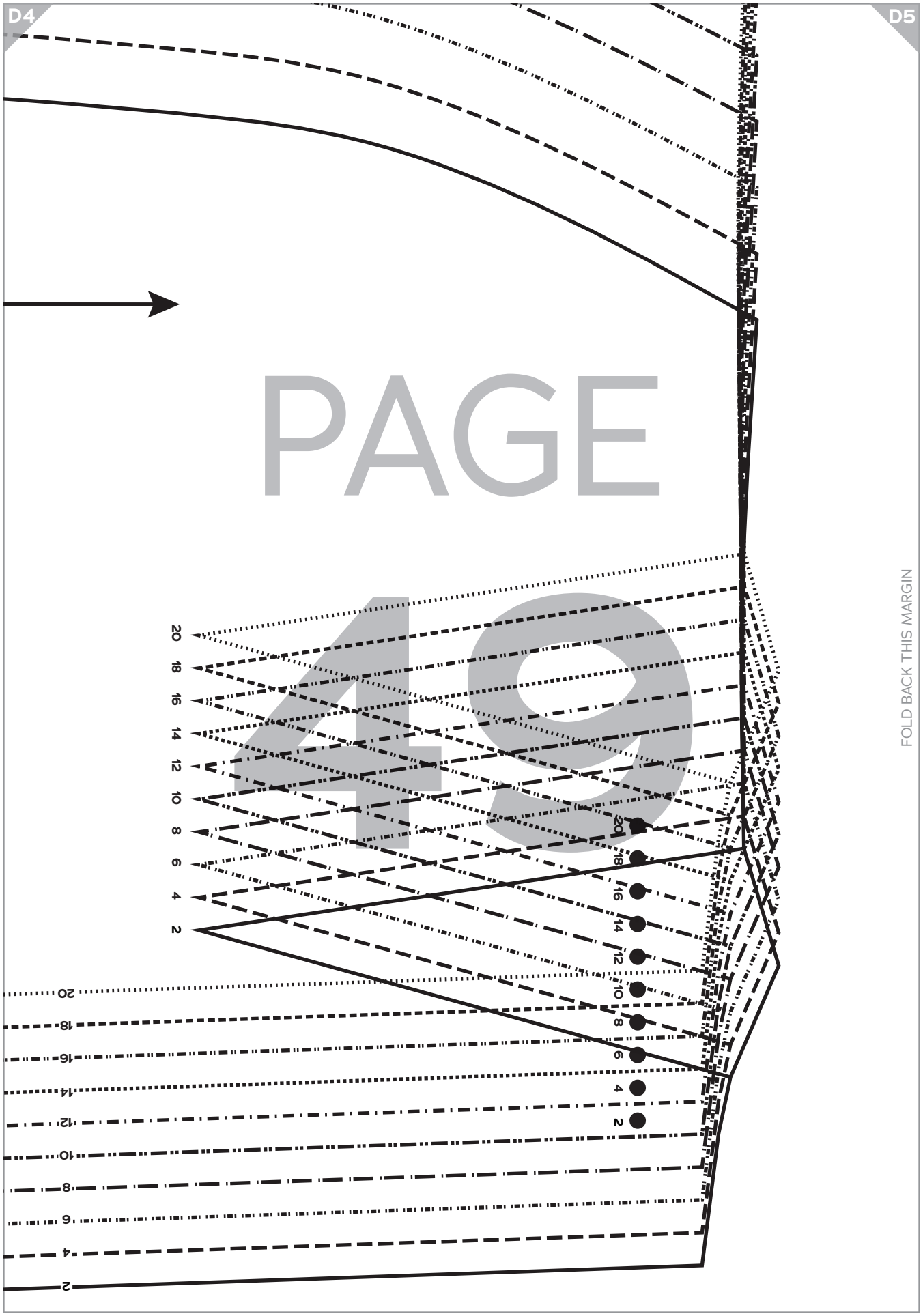
D4
D5
PAGE
49
FOLD BACK THIS MARGIN
2
4
6
8
10
12
14
16
18
20

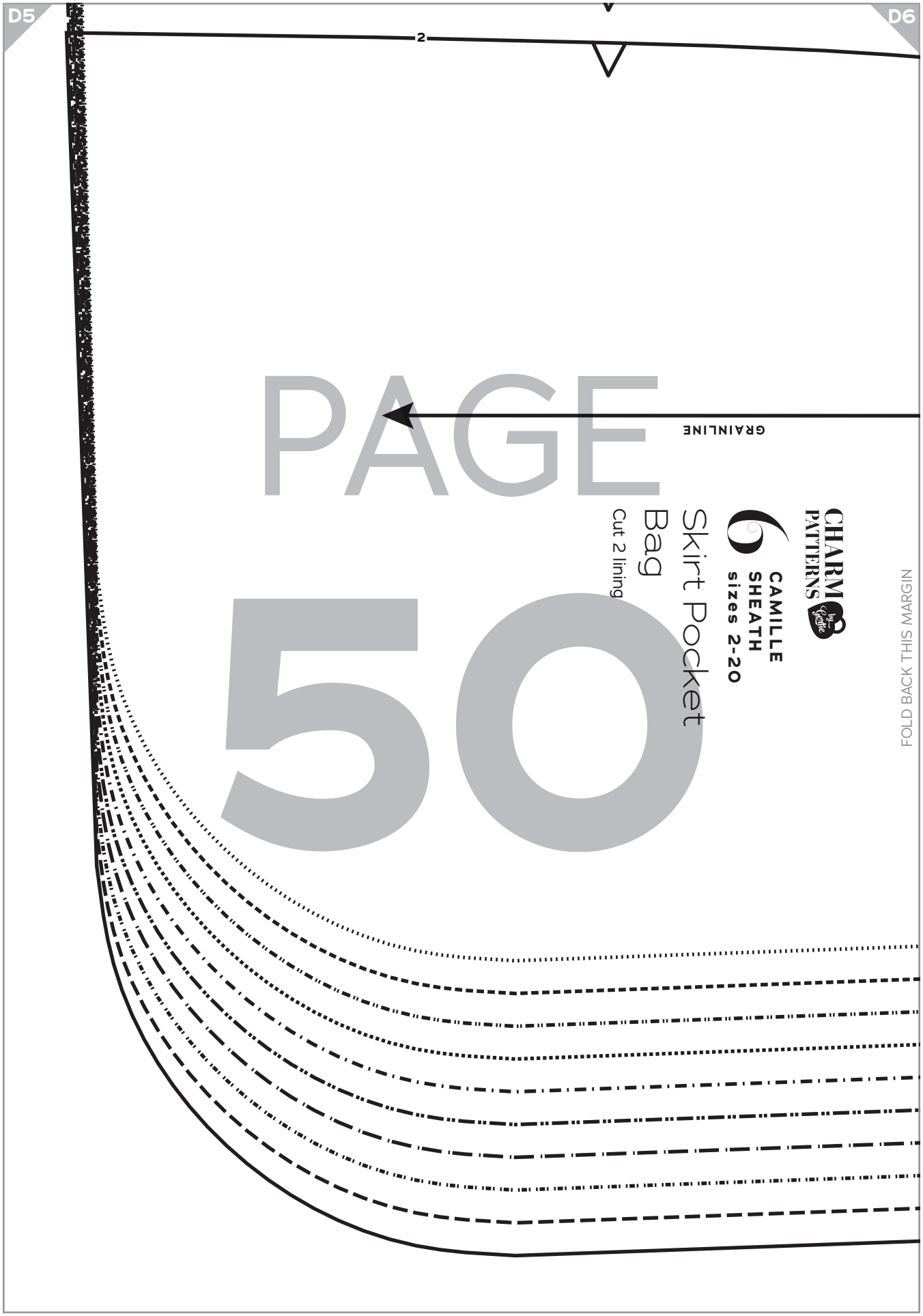
D5
D6
2
FOLD BACK THIS MARGIN
CHARM PATTERNS by Gertie
CAMILLE SHEATH
sizes 2-20
Skirt Pocket Bag
Cut 2 lining
GRAINLINE
PAGE 50

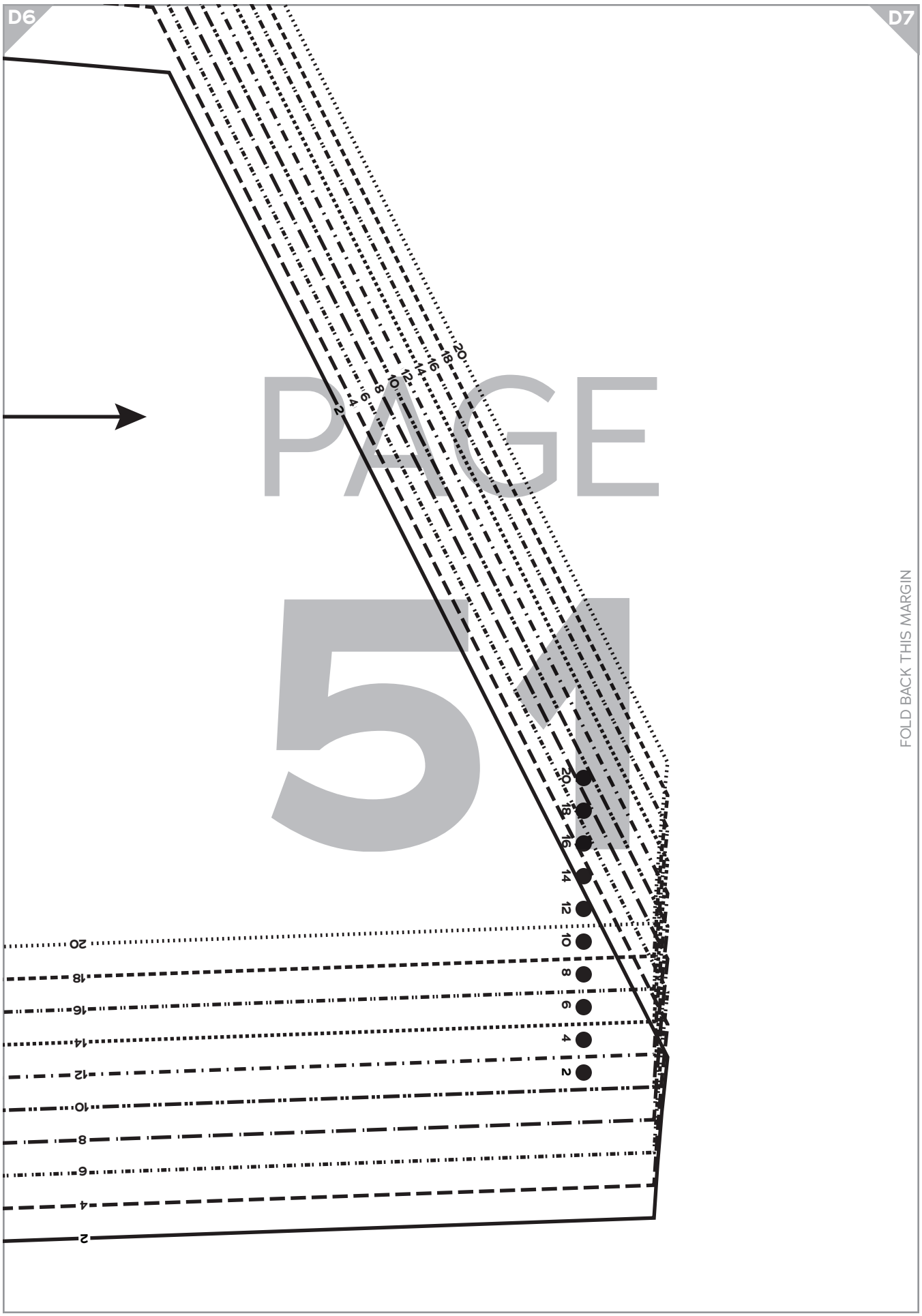
D6
D7
PAGE
51
2
4
6
8
10
12
14
16
18
20
FOLD BACK THIS MARGIN

D7

D8

CHARM PATTERNS by Gertie

2 CAMILLE SHEATH sizes 2-20

# Bodice Back

Cut 2 fabric, 2 lining

GRAINLINE

FOLD BACK THIS MARGIN

PAGE 52

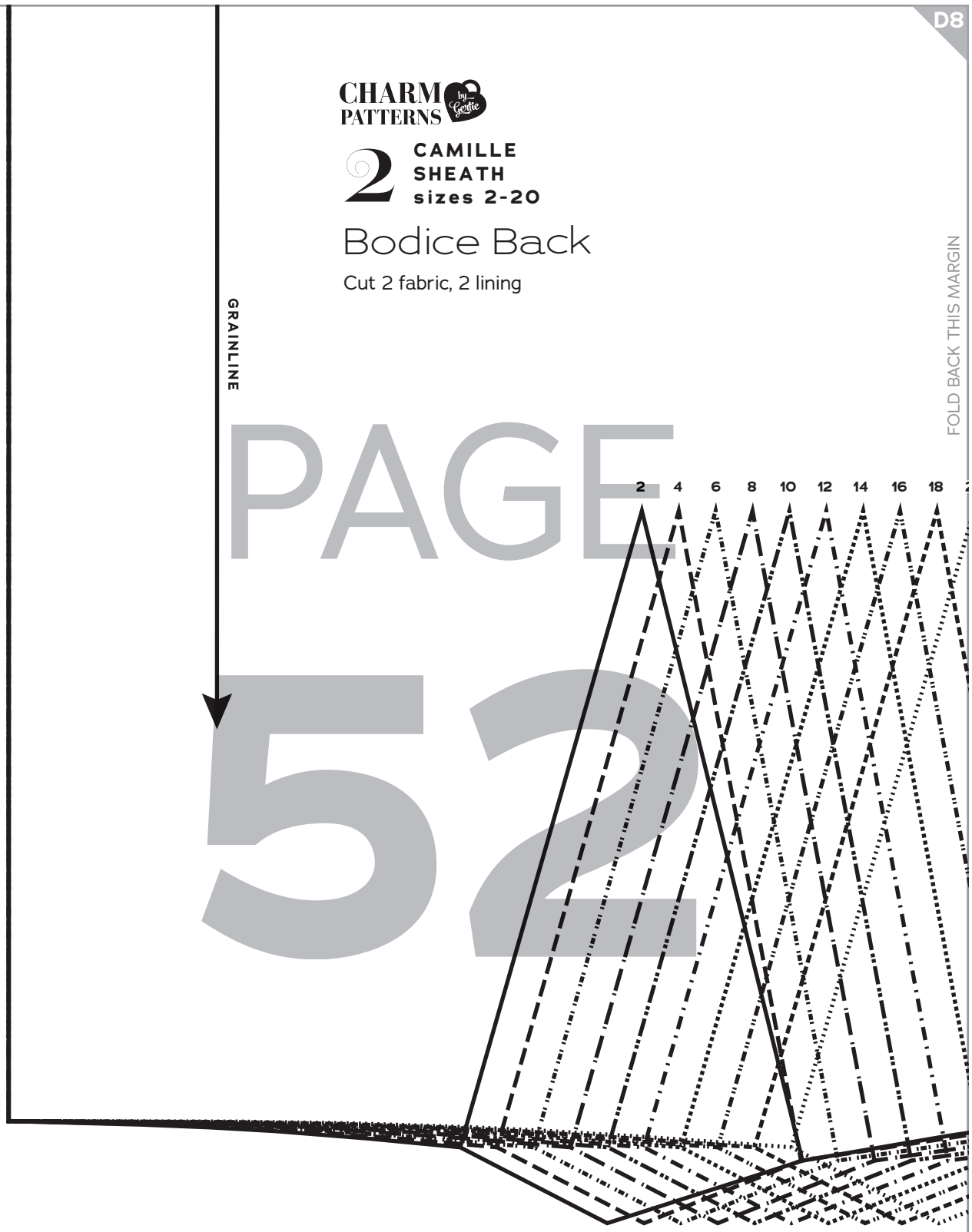

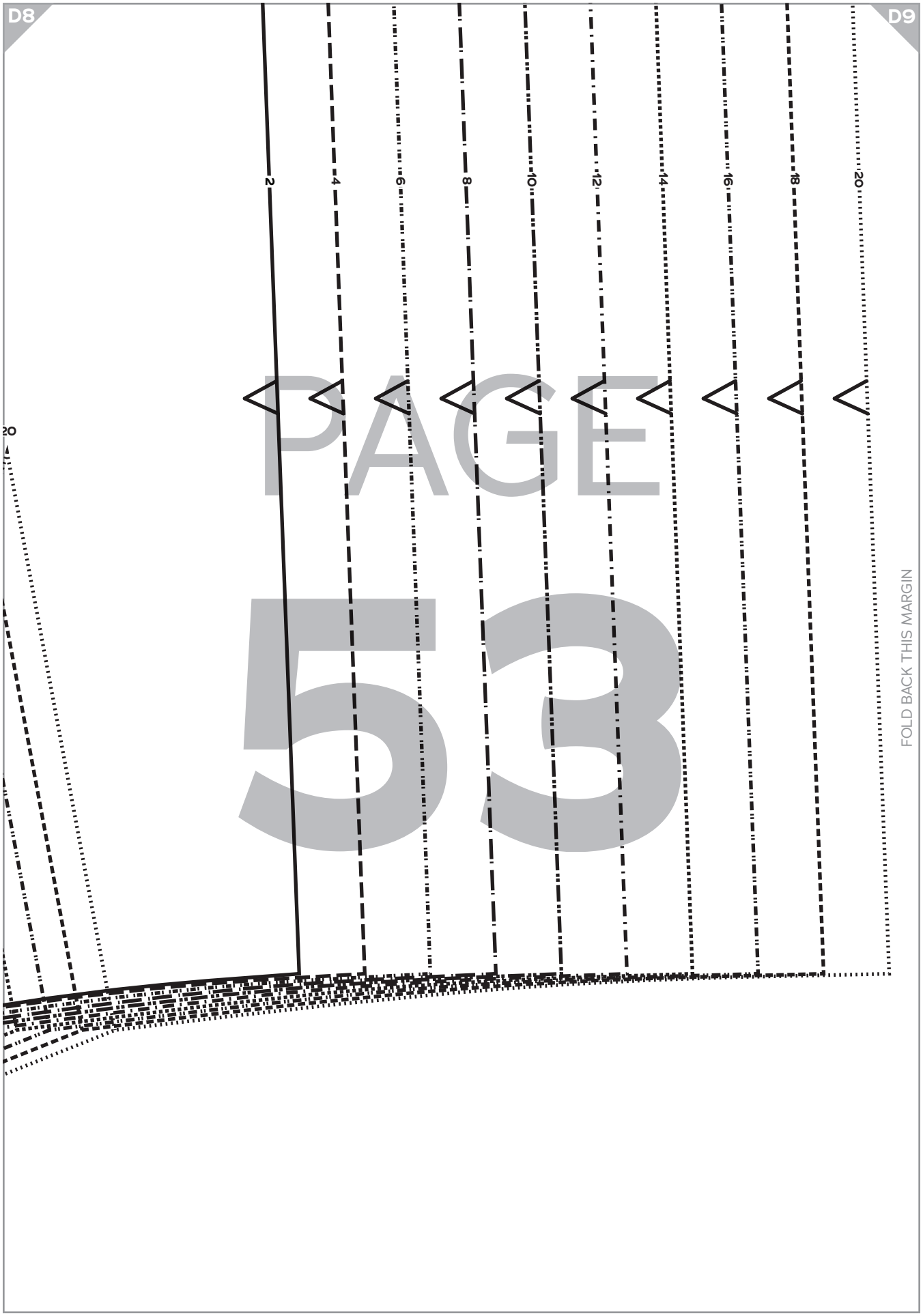
D8
D9
2
4
6
8
10
12
14
16
18
20
PAGE
53
FOLD BACK THIS MARGIN

D9

D10

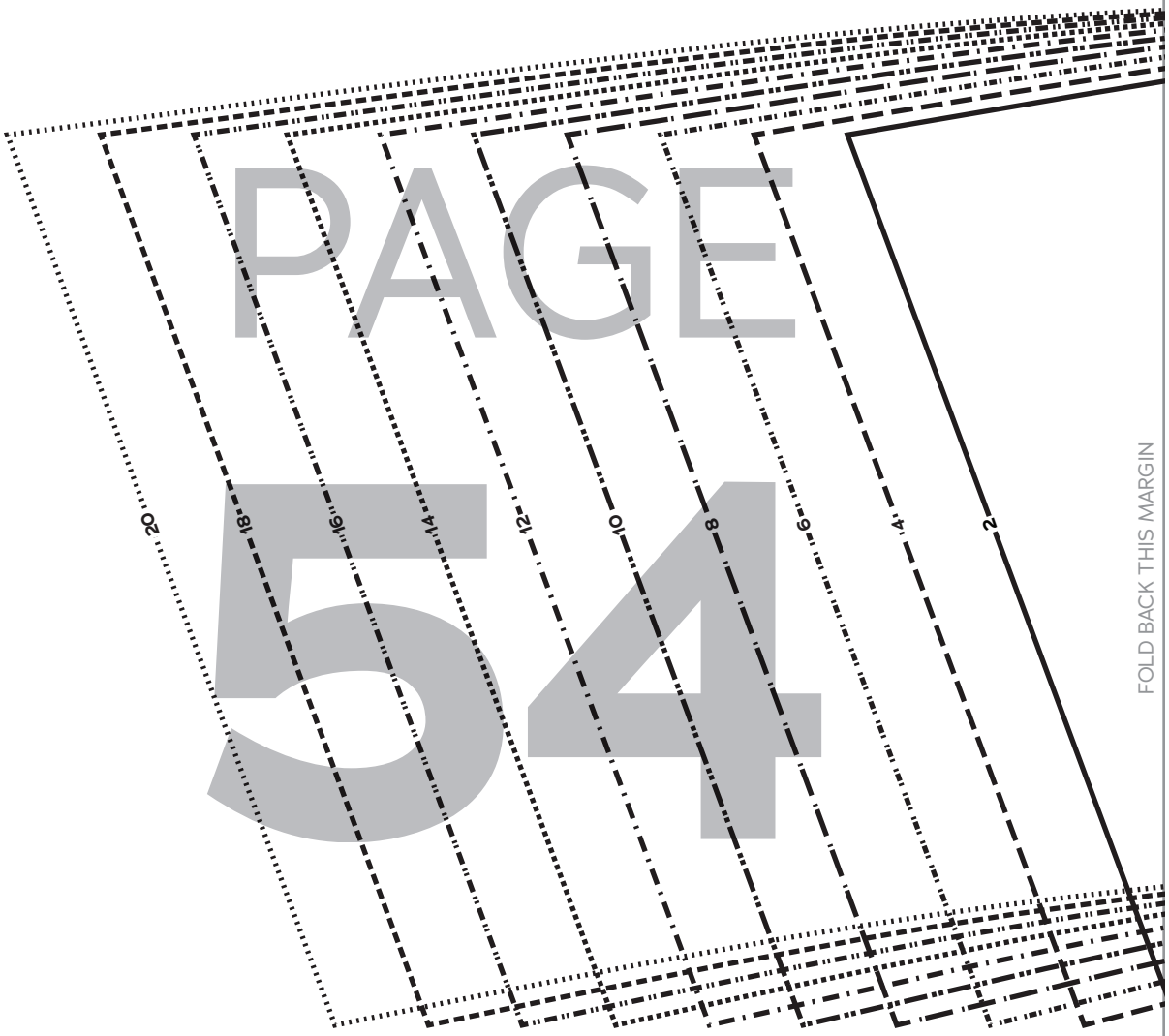


PAGE 54

FOLD BACK THIS MARGIN

D10

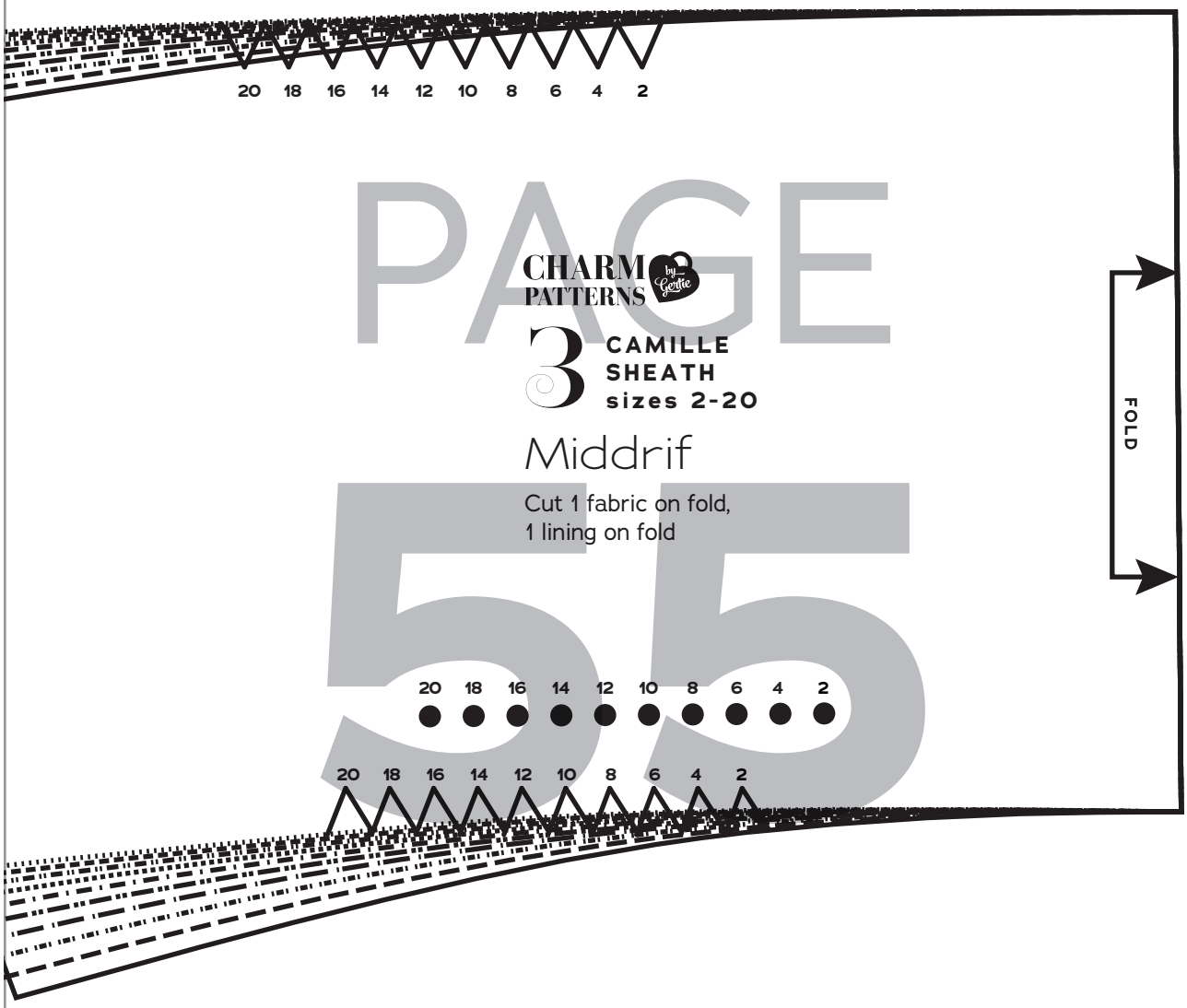
20 18 16 14 12 10 8 6 4 2
PAGE
CHARM PATTERNS by Gertie
3
CAMILLE SHEATH sizes 2-20
Middrif
Cut 1 fabric on fold,
1 lining on fold
55
FOLD
20 18 16 14 12 10 8 6 4 2
20 18 16 14 12 10 8 6 4 2

CHARM PATTERNS

**CAMILLE SHEATH**

Sizes 2-20

with cup sizes A-H

⅜ inch (in) (1.5 cm) seam allowances are included on all pattern pieces.

**SIZE 2-20 PATTERN SIZE KEY**

2
4
6
8
10
12
14
16
18
20

**SYMBOL KEY**

grainline arrow

match point/ placement mark

© 2024 Charm Patterns by Gertie | Distribution and Commercial Use Prohibited

2 cm test square
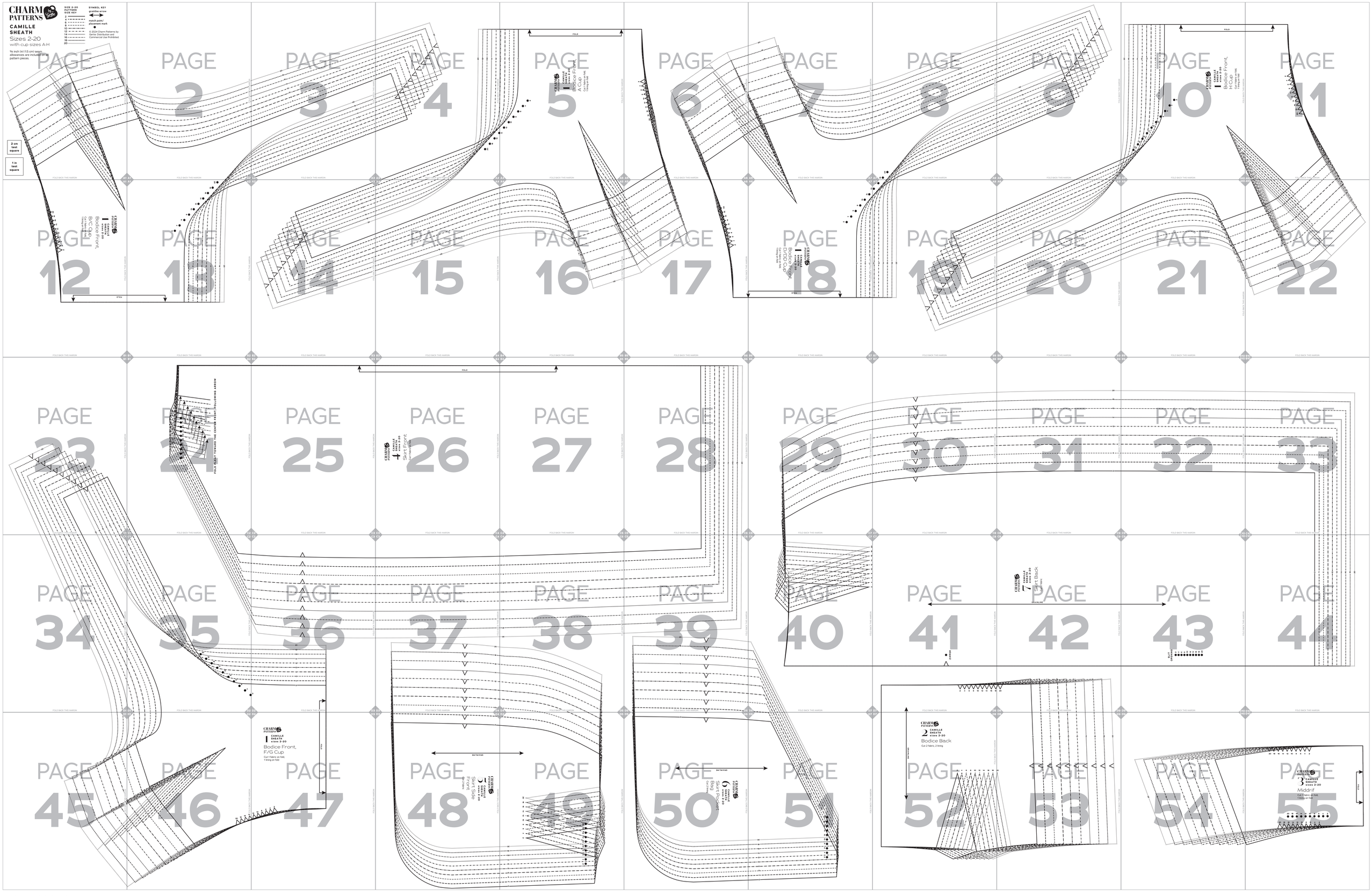
1 in test square